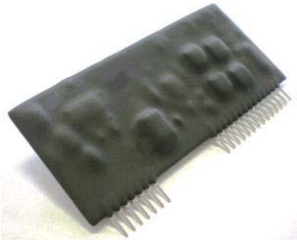
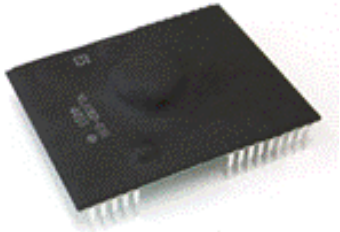
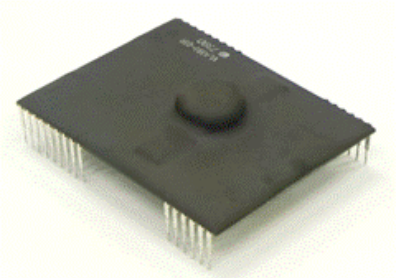

ISAHAYA IGBT drivers

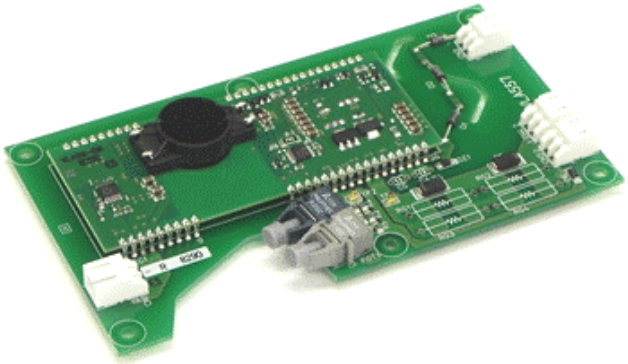
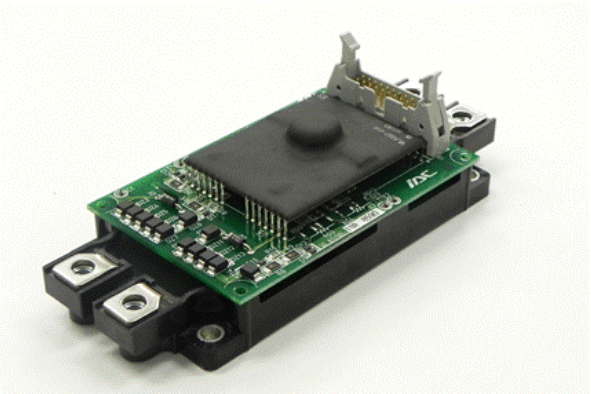

Sep. 2018
Isahaya electronics corporation
Semiconductor division

Our development policy

Wind power

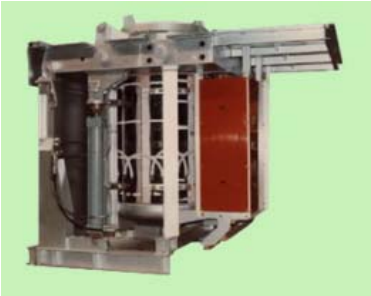
Induction heating machine

EV charging stand

Solar power

Machine tool

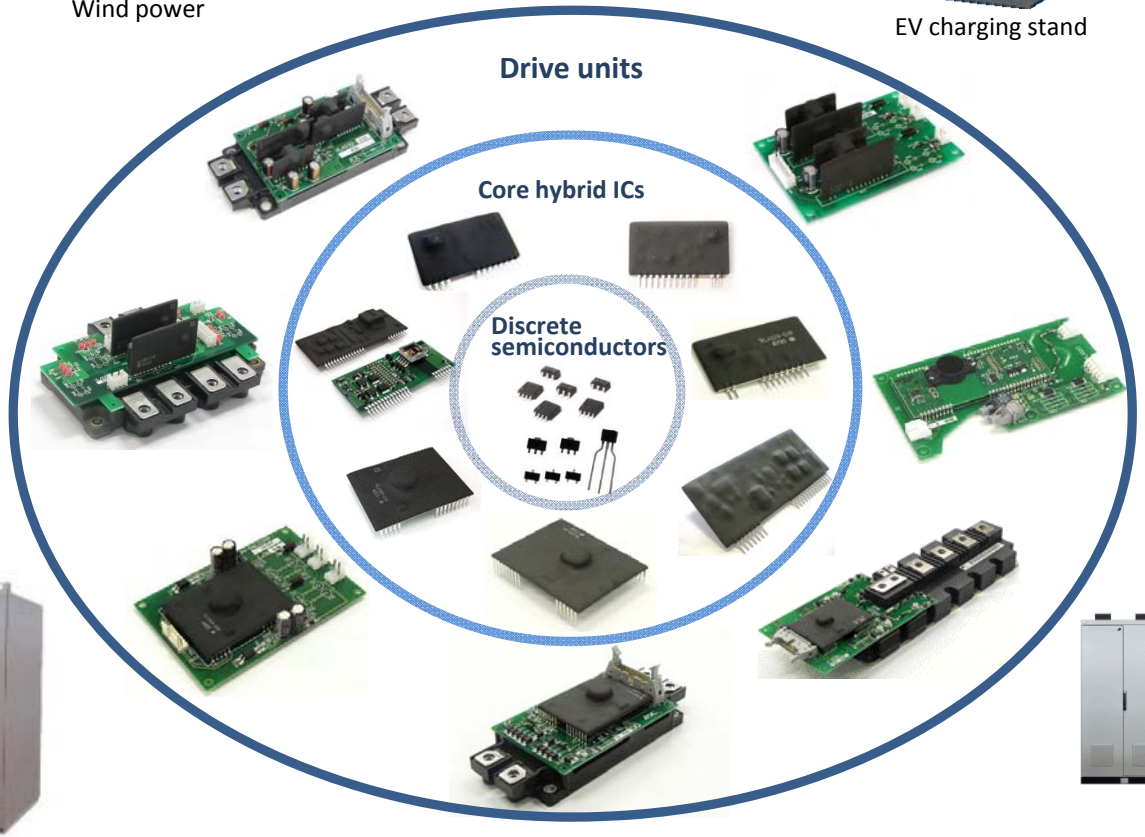

Manufacture machine

Accelerator

UPS

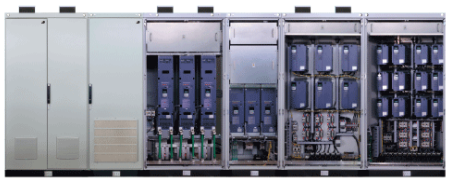
Inverter

Features of ISAHAYA IGBT drivers

Wide products range

Wide application range of 15A – 3600A class IGBT

SIL

Built in proven short circuit protection

It is effective to prevent short circuit destruction of IGBT.

DIL

Wide variation of structure

SIL,DIL,Unit type etc. These structure help designing of mother board.

Unit

Additional support for power supplies

ISAHAYA can produce peripheral power supplies too, with drivers.

Standardization of equipment design

Analog system engineer is short now. And our Hybrid ICs contribute to parts standardization and improvement of design efficiency .

IGBT-mountable unit type

Core IGBT driver support map(Rough reference)

About general industrial application,
ISAHAYA core drivers support almost all IGBT modules

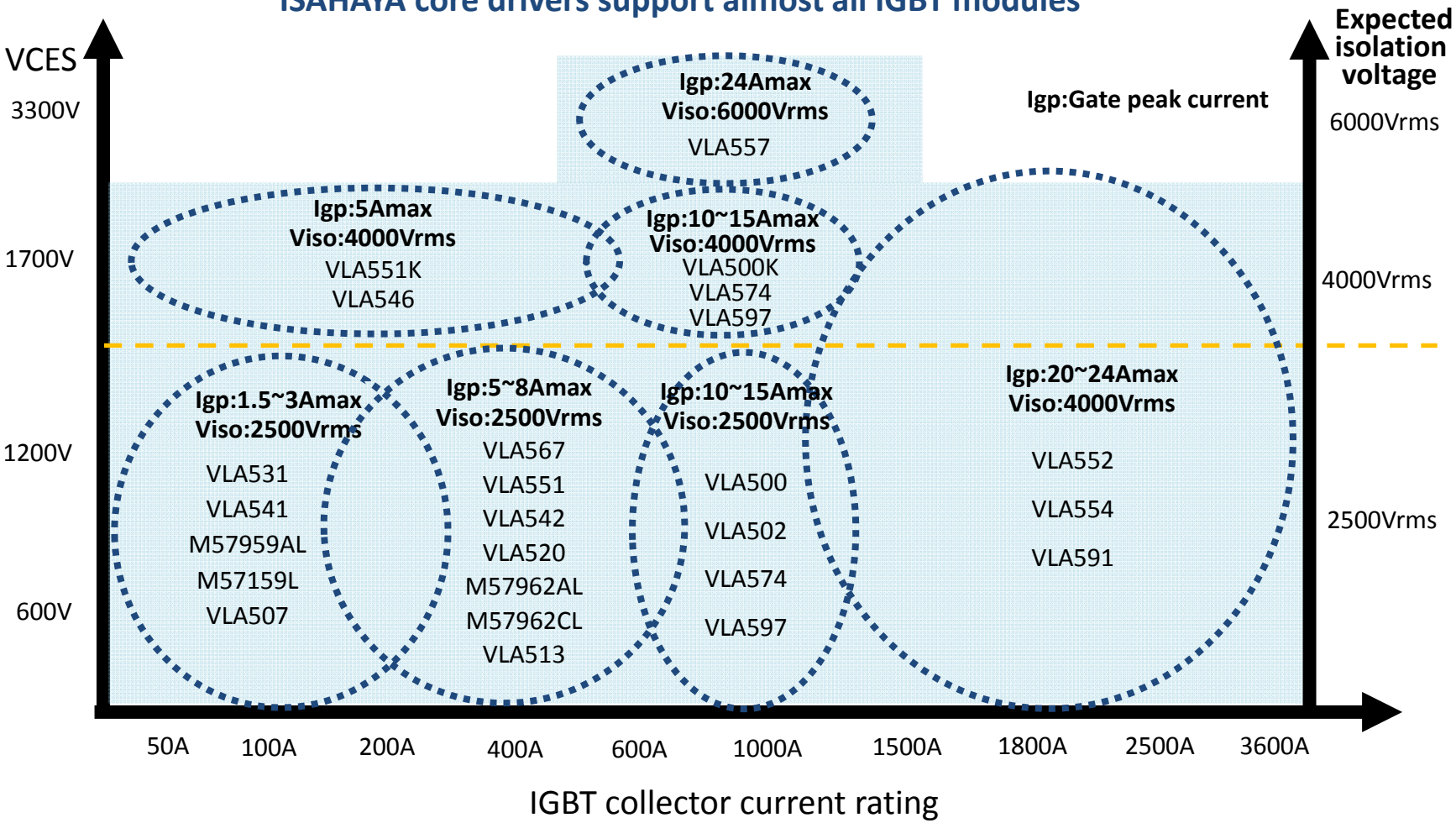

Core hybrid driver line up

Type name	Output peak current (A)	Isolation Voltage (Vrms)	Short circuit Protection circuit	Built in DCDC converter for gate drive	Soft shut down of short circuit protection	Adjusting soft shut down speed of short circuit protection
VLA507-01R	3	2500	-	-	-	-
VLA513-01R	5	2500	-	-	-	-
M57159L-01R	1.5	2500	Yes	-	Yes	-
M57959AL-01R	2	2500	Yes	-	Yes	-
M57962AL-01R	5	2500	Yes	-	Yes	-
M57962CL-01R	5	2500	Yes	-	Yes	Yes
VLA531-01R	2.5	2500	Yes	-	Yes	-
VLA541-01R	3	2500	Yes	-	Yes	-
VLA542-01R	5	2500	Yes	-	Yes	-
VLA546-01R	5	4000	Yes	-	Yes	Yes
VLA574-01R	15	4000	Yes	-	Yes	Yes
VLA551-01R	5	2500	Yes	Yes	Yes	Yes
VLA551K-01R	5	4000	Yes	Yes	Yes	Yes
VLA567-01R	8	2500	Yes	Yes	Yes	Yes
VLA567-02R	8	2500	Yes	Yes	Yes	Yes
VLA500-01R	12	2500	Yes	Yes	Yes	Yes
VLA502-01R	12	2500	Yes	Yes	Yes	Yes
VLA597-01R	10	4000	Yes	Yes	Yes	No
VLA500K-01R	12	4000	Yes	Yes	Yes	Yes
VLA591-01R	20	4000	Yes	Yes	Yes	Yes
VLA552-01R	24	4000	Yes	Yes	Yes	Yes
VLA554-01R	24	4000	Yes	Yes	Yes	Yes

Note ; VLA541 is compatible with M57959AL.
VLA542 is compatible with M57962AL.
VLA546 is compatible with M57962CL

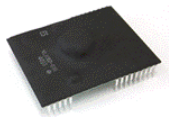

Unit type driver line up

Type name	Output peak current (A)	Isolation voltage (Vrms)	Short circuit protection circuit	Built in DCDC converter for gate drive	Soft shut down of short circuit protection	Collector clamp	Number of circuit	Core HIC built in	Note
GAU205S-15252	5	2500	-	Yes	Yes	No	2	VLA513/VLA106	Evaluation kit
GAU205P-15252A	5	2500	Yes	Yes	Yes	No	2	VLA542/VLA106	Evaluation kit
GAU205P-15402	5	4000	Yes	Yes	Yes	No	2	VLA551K	Evaluation kit
GAU208P-15252	8	2500	Yes	Yes	Yes	No	2	VLA567	Evaluation kit
GAU212S-15255	12	2500	-	Yes	Yes	No	2	VLA502	Evaluation kit
GAU212P-15255	12	2500	Yes	Yes	Yes	No	2	VLA500	Evaluation kit
GAU215P-15405	15	4000	Yes	Yes	Yes	No	2	VLA574/DCDC	Evaluation kit
GAU405P-15252	5	2500	Yes	Yes	Yes	No	4	VLA551	Evaluation kit
GAU605P-15252	5	2500	Yes	Yes	Yes	No	6	VLA551	Evaluation kit
VLA536-01R	5	2500	Yes	Yes	Yes	No	2	VLA520/VLA106	For NX 2in1 Series
VLA592-01R	5	2500	Yes	Yes	Yes	No	2	VLA520/VLA106	For NX 2in1 Series
VLA598-01R	10	4000	Yes	Yes	Yes	No	2	VLA597	For NX 2in1 series
VLA598-11R	10	4000	Yes	Yes	Yes	Yes	2	VLA597	For NX 2in1 series
VLA593-11R	20	4000	Yes	Yes	Yes	Yes	2	VLA591	For Prime PACK 1700V
VLA559-02R	24	4000	Yes	Yes	Yes	Yes	2	VLA552	For Prime PACK 1700V
VLA557-11R	24	4000	Yes	Yes	Yes	No	1	VLA556-11R	For HVIGBT 1700V std.
VLA557-01R	24	6000	Yes	Yes	Yes	No	1	VLA556-01R	For HVIGBT 3300V std.
VLA557-03R	24	6000	Yes	Yes	Yes	No	2	VLA556-03R	For HVIGBT 3300V, LV100

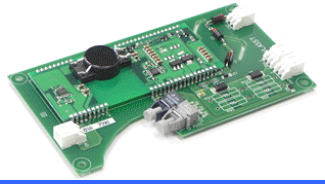

Dual Inline package gate amp module “VLA591-01R”

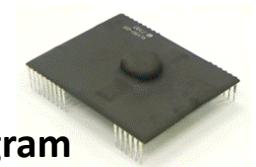

Preliminary

Outline drawing

Unit : mm

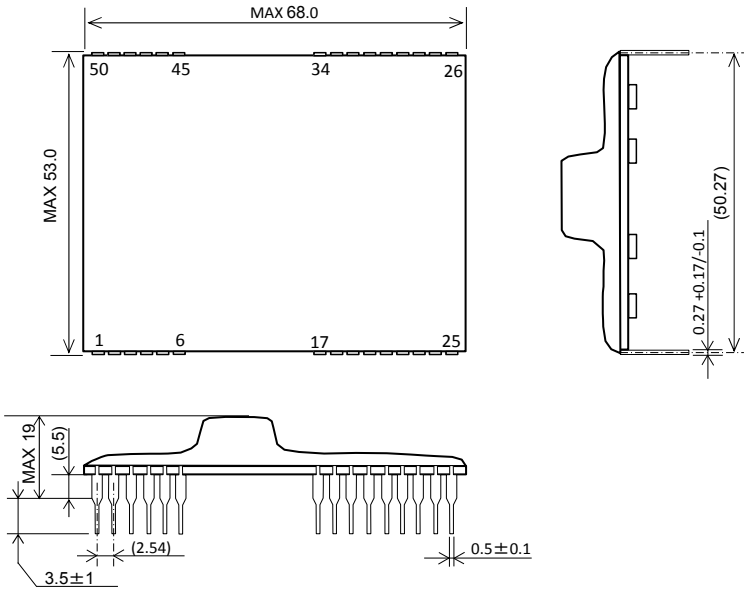

Block diagram

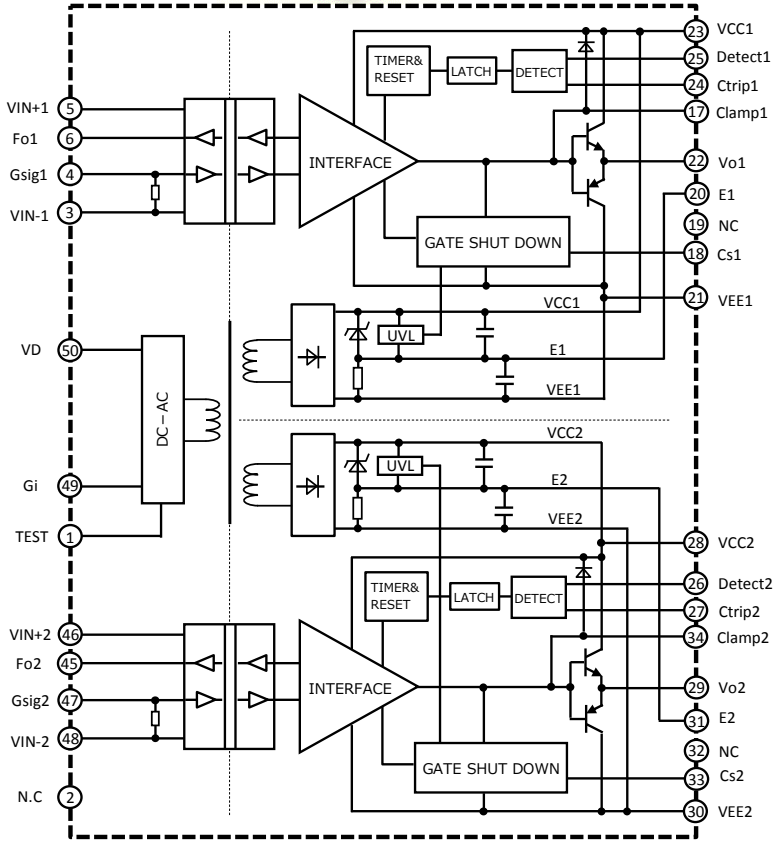

Features

>Low height, DIP structure

>Built in high isolation voltage digital isolators

>Built in the isolated DC-DC converter for gate drive

>Input supply voltage is 15V

>Output peak current is +/-20A(max)

>Built in short circuit protection with soft gate shut down

>Electrical isolation voltage is 4000Vrms(for 1 min.)

>Built in gate shut down speed control circuit

Targeted IGBT modules

VCES = 600V series ~ 600A class

VCES = 1200V series ~ 1400A class

VCES = 1700V series ~ 1400A class

IGBT Gate Drive Unit VLA593-11R

Preliminary

Outline (Image photo)

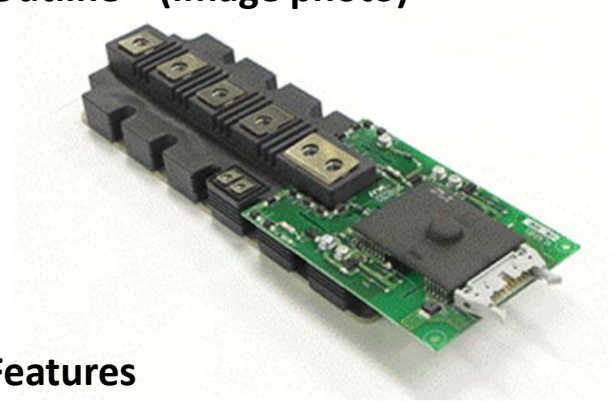

Block Diagram

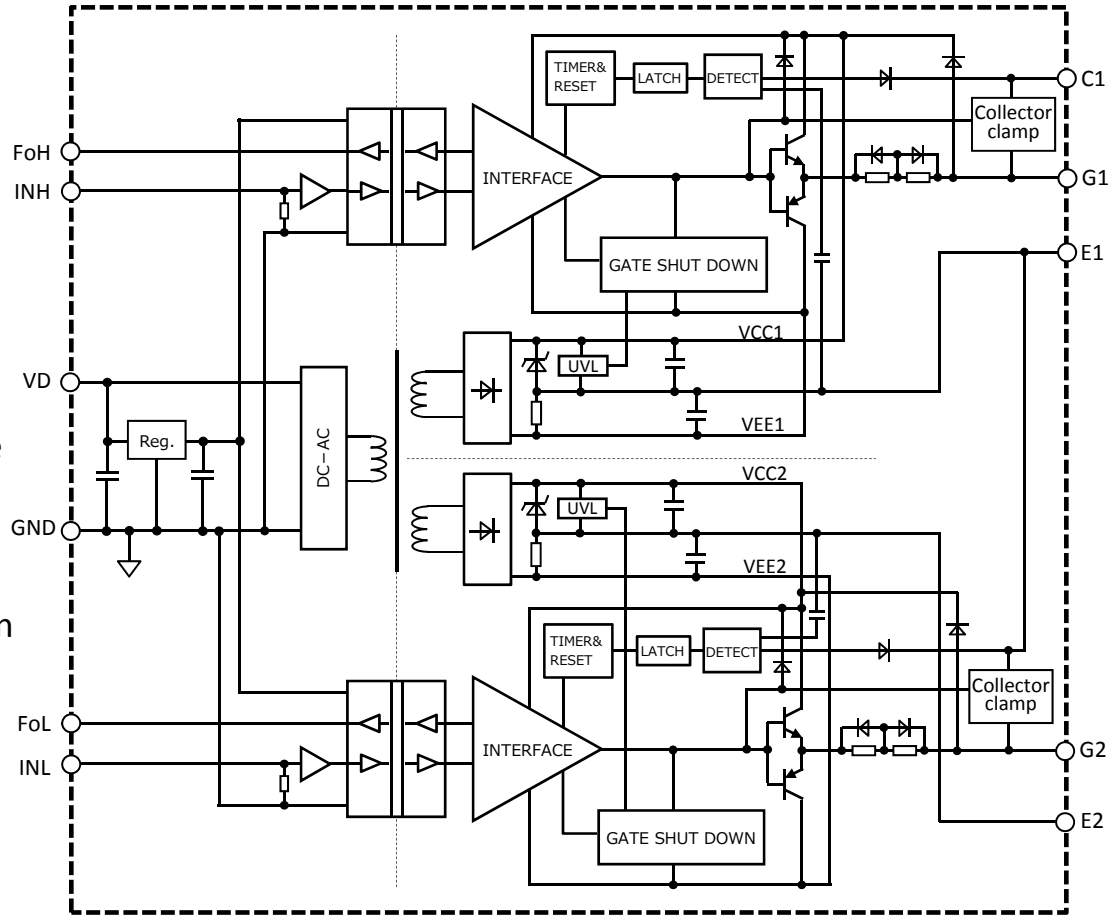

Features

>Directly mountable on the Prime PACK
>Built in the isolated DC-DC converter for gate drive
>Output peak current is +/-20A(max)
>Electrical isolation voltage is 4000Vrms (for 1 minute)
>Built in short circuit protection with soft shut down
>Built in collector clamp circuit
>One way power supply system for drivers and input signal (VD=15V)

Targeted IGBT Modules

VCES:1700V series ~ 1400A class (Prime PACK)

Applications

To drive IGBT modules for inverter, wind power or AC servo system application

Wave form example (Normal switching)

IGBT : FF1400R17IP4
Driver : VLA593-11R
Rg_on=0.47Ω　Rg_off=0.68Ω

V_PN=900V, IC=1400A (Turn on)

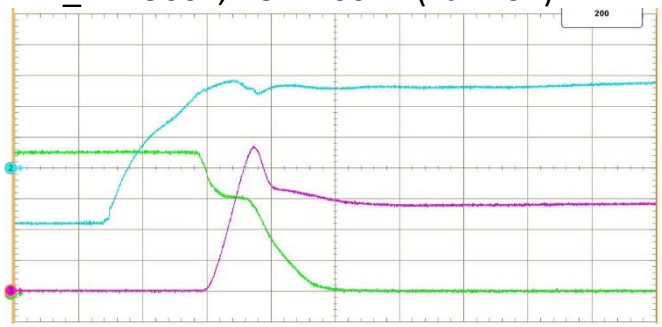

Blue:VGE 5V/div　Green:VCE 200V/div　Red:IC 500A/div
Time:500ns/div

V_PN=900V, IC=1400A (Turn off)

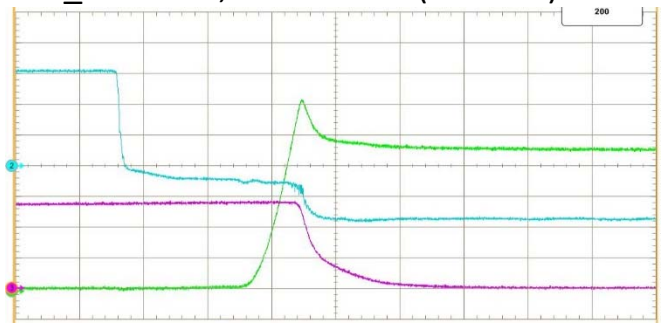

Blue:VGE 5V/div　Green:VCE 200V/div　Red:IC 500A/div
Time:500ns/div

V_PN=900V, IC=2800A (Turn on)

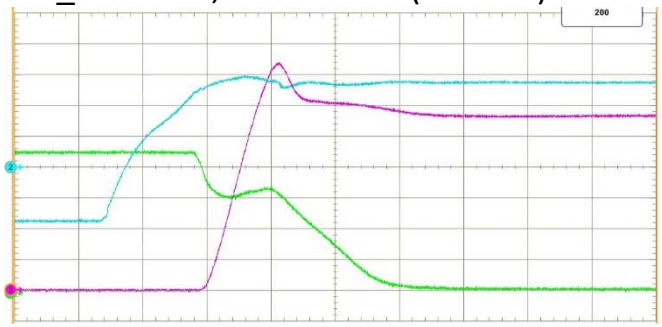

Blue:VGE 5V/div　Green:VCE 200V/div　Red:IC 500A/div
Time:500ns/div

V_PN=900V, IC=2800A (Turn off)

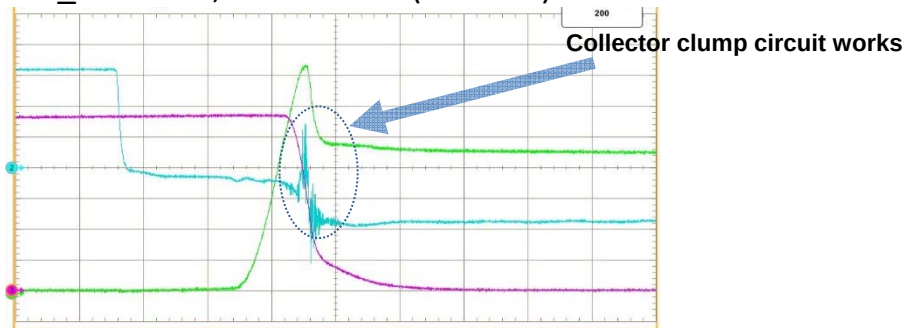

Blue:VGE 5V/div　Green:VCE 200V/div　Red:IC 500A/div
Time:500ns/div

Wave form example (Arm short circuit)

IGBT : FF1400R17IP4
Driver : VLA593-11R
Rg_on=0.47Ω　Rg_off=0.68Ω

VPN:900V　Arm short circuit

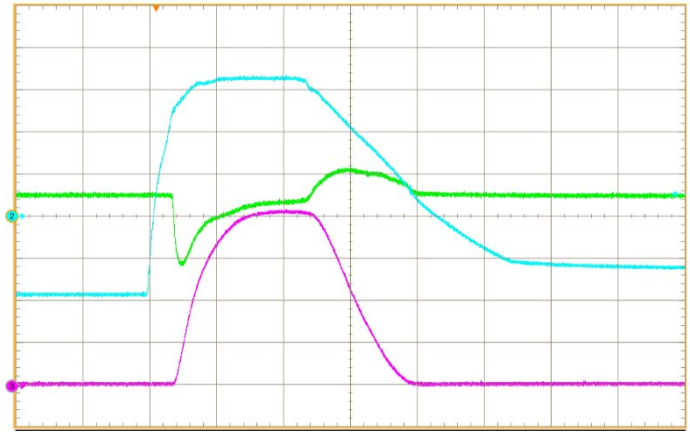

Blue:VGE 5V/div　Green:VCE 200V/div　Red:IC 2000A/div
Time:2us/div

Dual Inline package gate amp module “VLA597-01R”

Preliminary

Outline drawing

Unit : mm

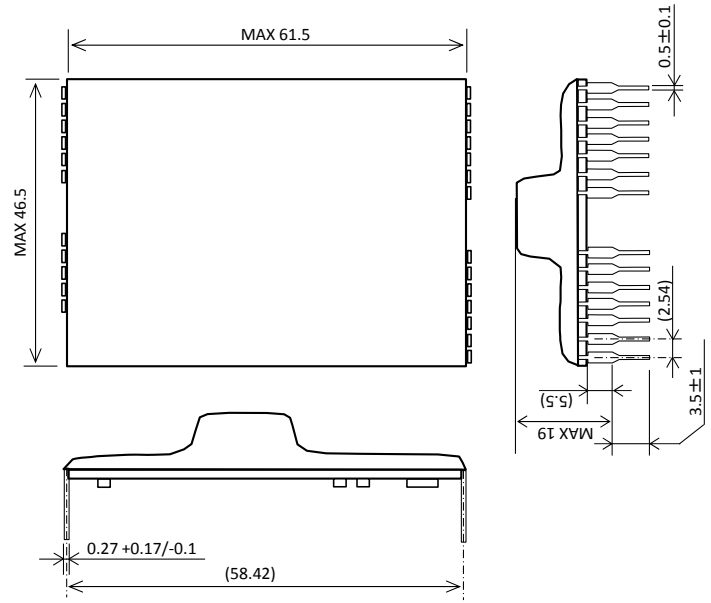

Block diagram

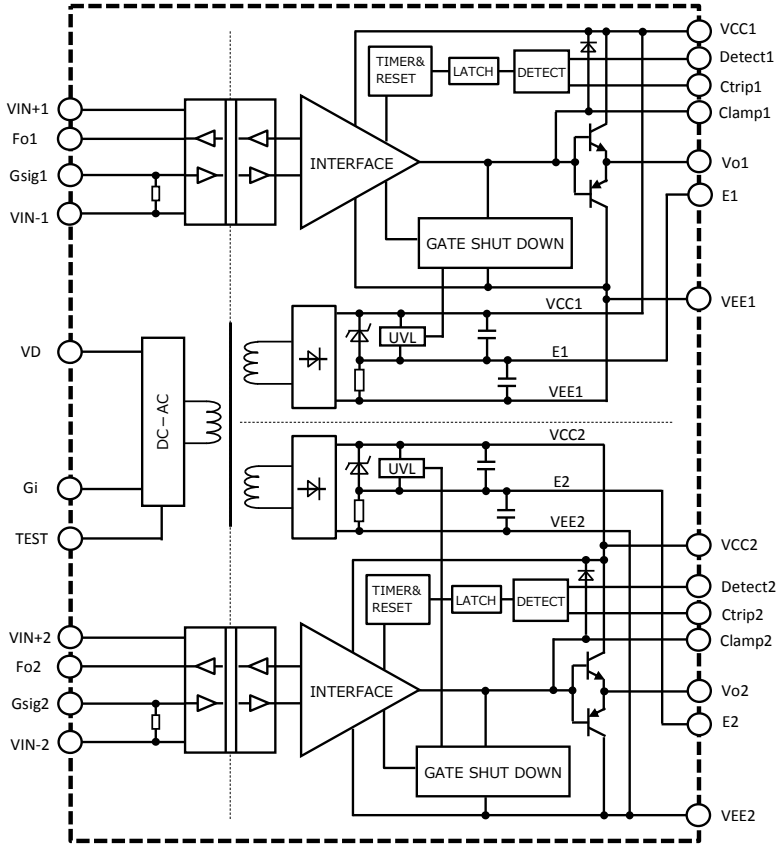

Features

>Low height, DIP structure

>Built in high isolation voltage digital isolators

>Built in the isolated DC-DC converter for gate drive

>Input supply voltage is 15V

>Output peak current is +/-10A(max)

>Built in short circuit protection with soft gate shut down

>Electrical isolation voltage is 4000Vrms(for 1 min.)

Targeted IGBT modules

VCES = 600V series ~ 600A class

VCES = 1200V series ~ 600A class

VCES = 1700V series ~ 600A class

IGBT Gate Drive Unit VLA598-11R

Preliminary

Outline (Image photo)

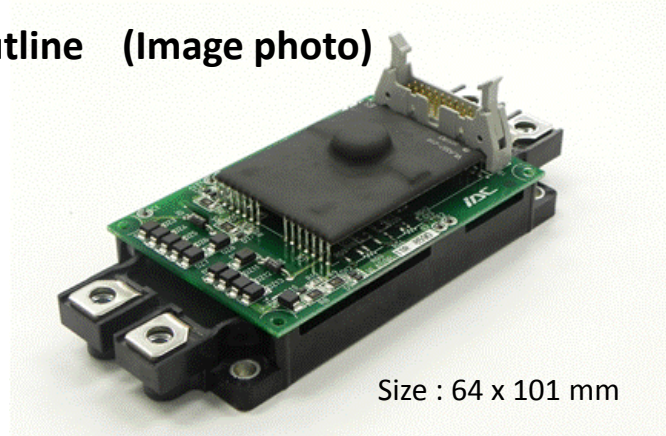

Block Diagram

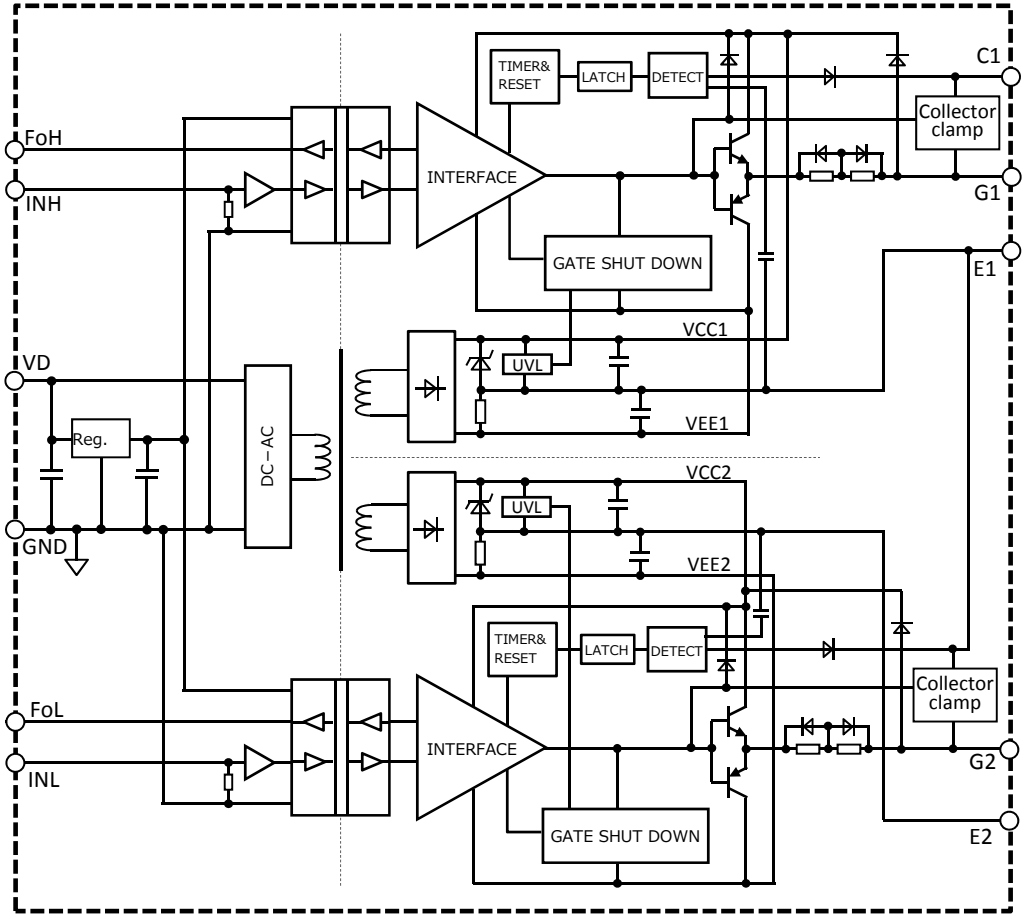

Features

>Directly mountable on the IGBT module
>Built in the isolated DC-DC converter for gate drive
>Output gate peak current is +/-10A(max)
>Electrical isolation voltage is 4000Vrms (for 1 minute)
>Built in short circuit protection with soft shut down
>Built in collector clamp circuit
>One way power supply system for drivers and input signal (VD=15V)

Targeted IGBT Modules

VCES:1700V series ~ 600A class

Applications

To drive IGBT modules for inverter or AC servo system application

Wave form example (Normal switching)

IGBT : FF600R17ME4
Driver : VLA598-11R
Rg_on=1Ω Rg_off=1Ω

V_PN=900V, IC=600A (Turn on)

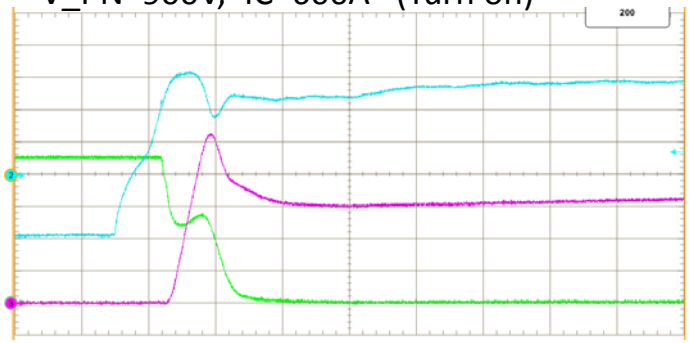

Blue:VGE 5V/div Green:VCE 200V/div Red:IC 200A/div
Time:500ns/div

V_PN=900V, IC=600A (Turn off)

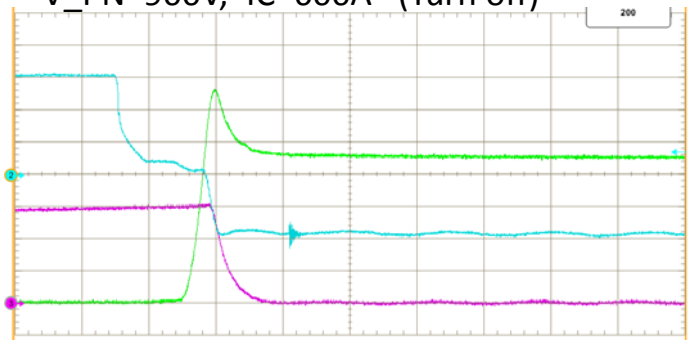

Blue:VGE 5V/div Green:VCE 200V/div Red:IC 200A/div
Time:500ns/div

V_PN=900V, IC=1200A (Turn on)

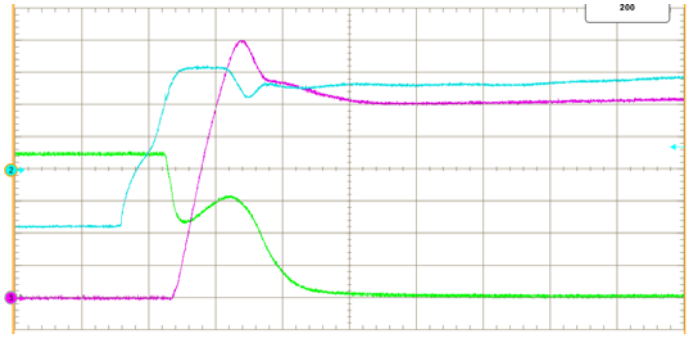

Blue:VGE 5V/div Green:VCE 200V/div Red:IC 200A/div
Time:500ns/div

V_PN=900V, IC=1200A (Turn off)

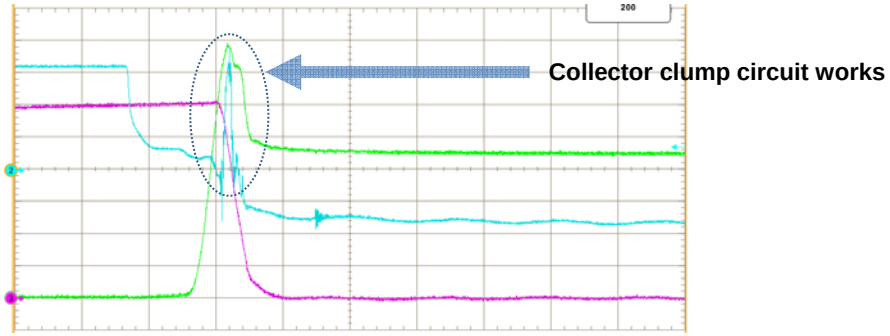

Blue:VGE 5V/div Green:VCE 200V/div Red:IC 200A/div
Time:500ns/div

Wave form example (Arm short circuit)

IGBT : FF1400R17IP4
Driver : VLA598-11R
Rg_on=0.47Ω　Rg_off=0.68Ω

VPN:900V　Arm short circuit

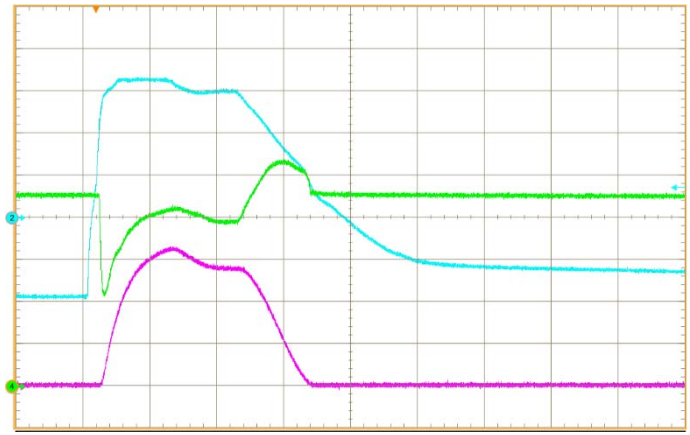

Blue:VGE 5V/div　Green:VCE 200V/div　Red:IC 1000A/div
Time:2us/div

IGBT Gate Drive Unit VLA598-01R

Preliminary

Outline (Image photo)

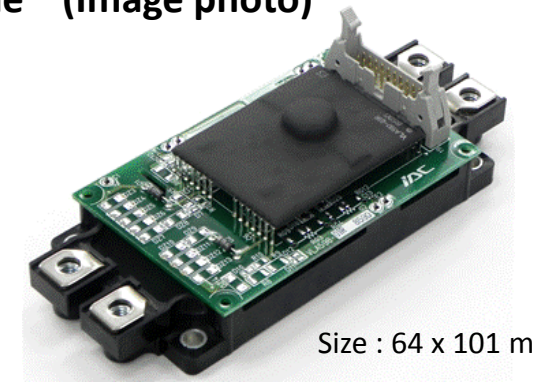

Size : 64 x 101 mm

Block Diagram

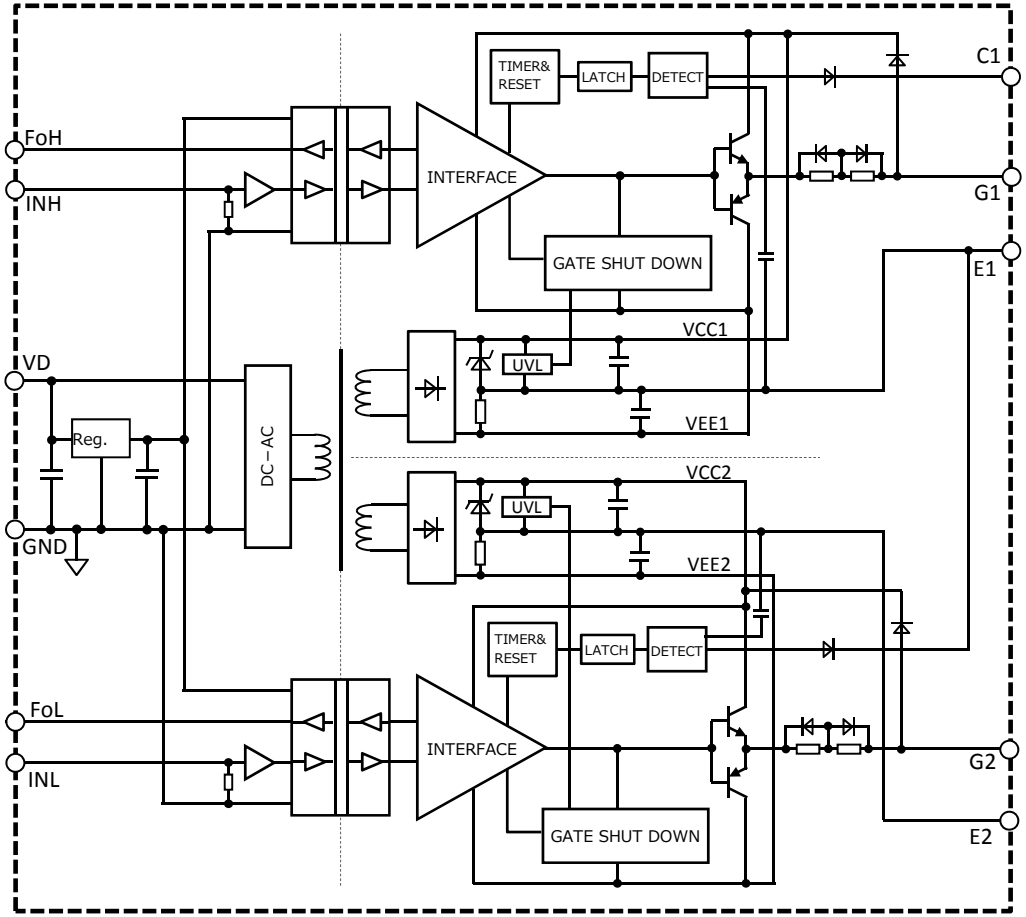

Features

>Directly mountable on the IGBT module
>Built in the isolated DC-DC converter for gate drive
>Output gate peak current is +/-10A(max)
>Electrical isolation voltage is 4000Vrms (for 1 minute)
>Built in short circuit protection with soft shut down
>One way power supply system for drivers and input signal (VD=15V)

Targeted IGBT Modules

VCES:1200V series ~ 800A class
VCES:1700V series ~ 600A class

Applications

To drive IGBT modules for inverter or AC servo system application

HVIGBT Gate Drive Unit VLA557-01R

Preliminary

Outline (Image photo)

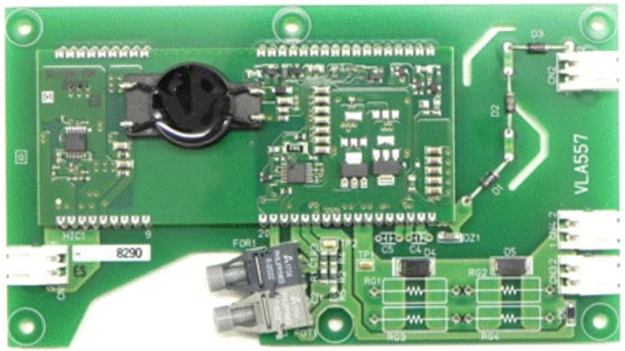

Size : 83 x 150 mm

Block Diagram

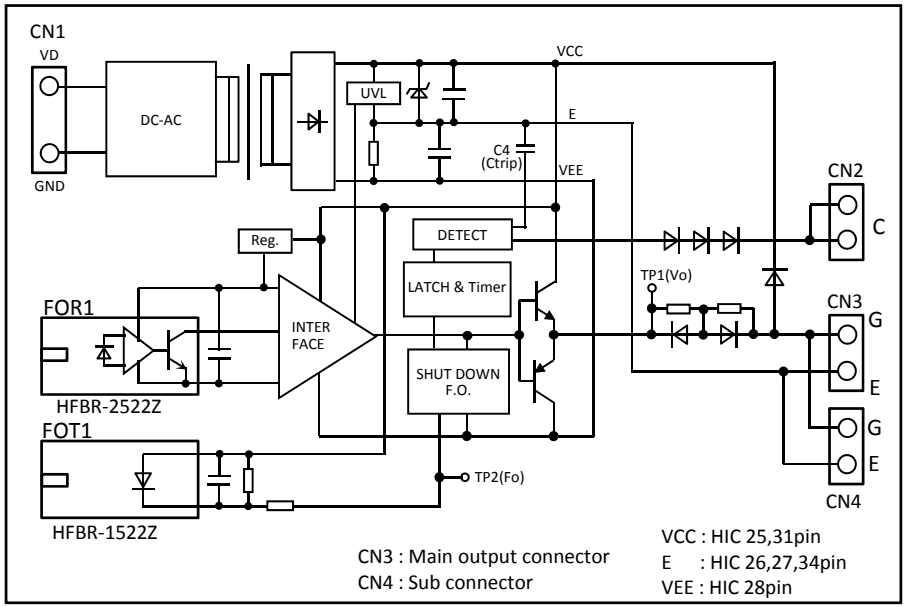

Feature

>Single channel simple and easy gate drive system
>Wire connection to IGBT
>Built in the isolated DC-DC converter for gate drive
>Output peak current is +/-24A(max)
>Built in short circuit protection with soft shut down
>Electrical isolation voltage is 6000Vrms
(for 1 minute)
>Fiber optic interface

Targeted IGBT Modules

VCES : 3300V, ~ 1500A class IGBT module

Applications

HVDC infrastructure
Medium voltage inverter
Wind turbine inverter etc..

Connection example

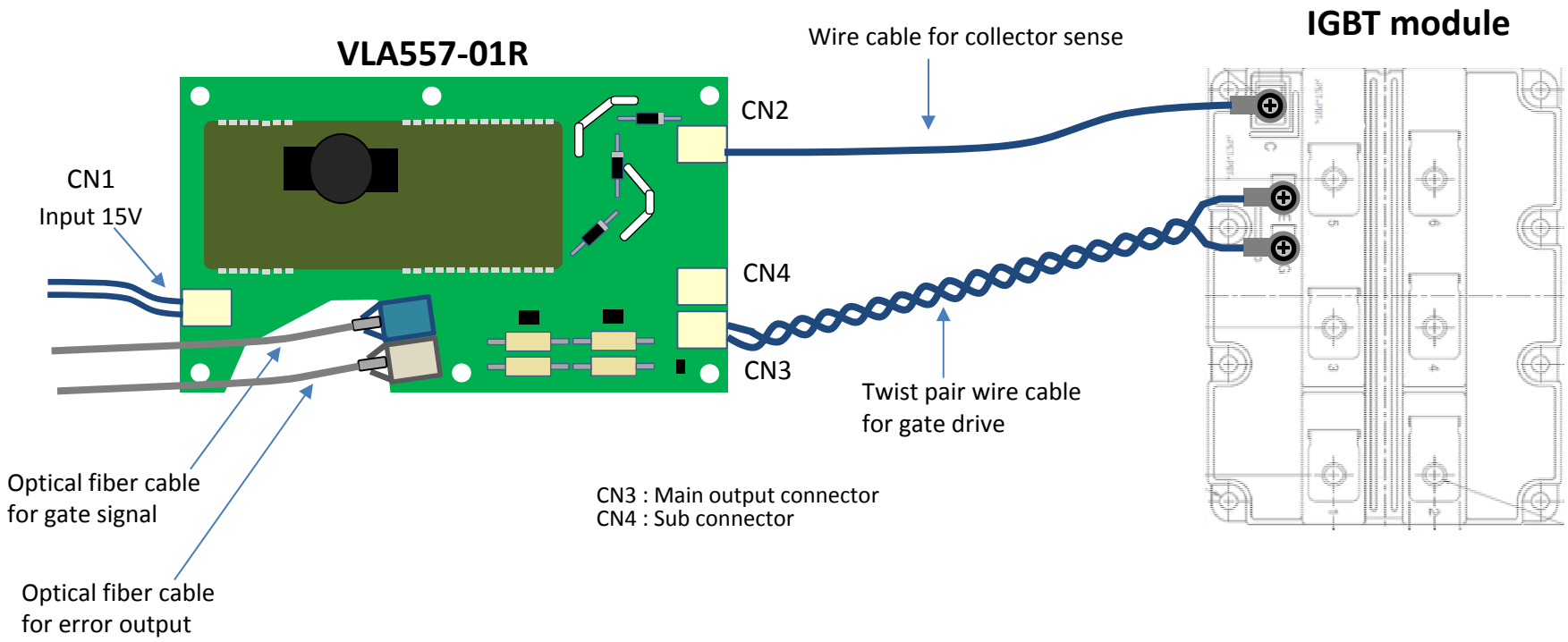

Wave form example (Normal switching)

IGBT : CM1500HC-66R
Driver : VLA557-01R Rg_on=1.6Ω Rg_off=5.6Ω

V_PN=2200V, IC=1500A (Turn on)

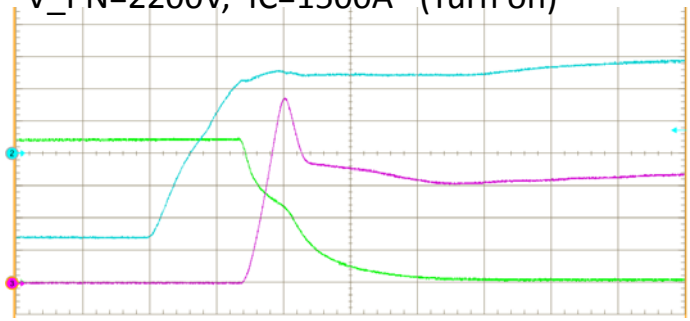

Blue:VGE 5V/div Green:VCE 500V/div Red:IC 500A/div
Time:1us/div

V_PN=2200V, IC=1500A (Turn off)

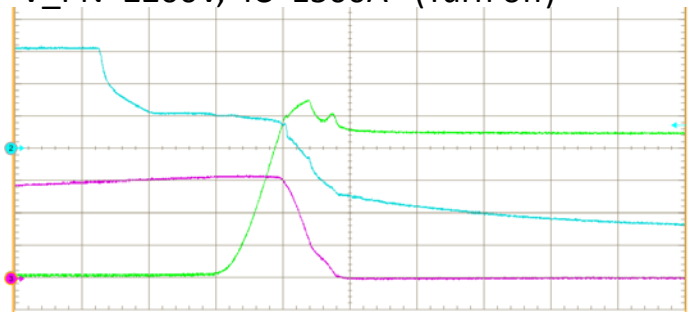

Blue:VGE 5V/div Green:VCE 500V/div Red:IC 500A/div
Time:1us/div

V_PN=2200V, IC=3000A (Turn on)

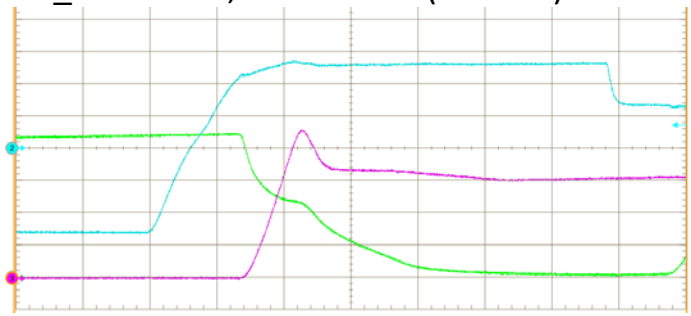

Blue:VGE 5V/div Green:VCE 500V/div Red:IC 1000A/div
Time:1us/div

V_PN=2200V, IC=3000A (Turn off)

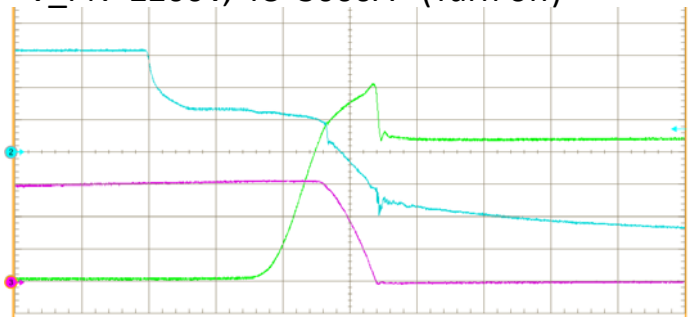

Blue:VGE 5V/div Green:VCE 500V/div Red:IC 1000A/div
Time:1us/div

Wave form example (Arm short circuit)

IGBT : CM1500HC-66R
Driver : VLA557-01R Rg_on=1.6Ω Rg_off=5.6Ω

VPN:1800V Arm short circuit

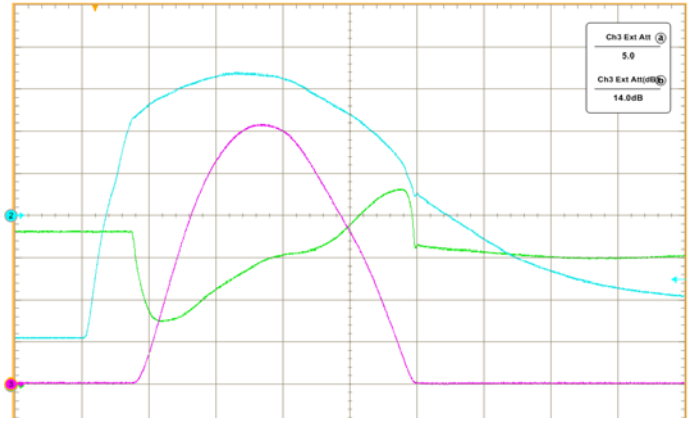

Blue:VGE 5V/div Green:VCE 500V/div Red:IC 2000A/div
Time:2us/div

VPN:2200V Arm short circuit

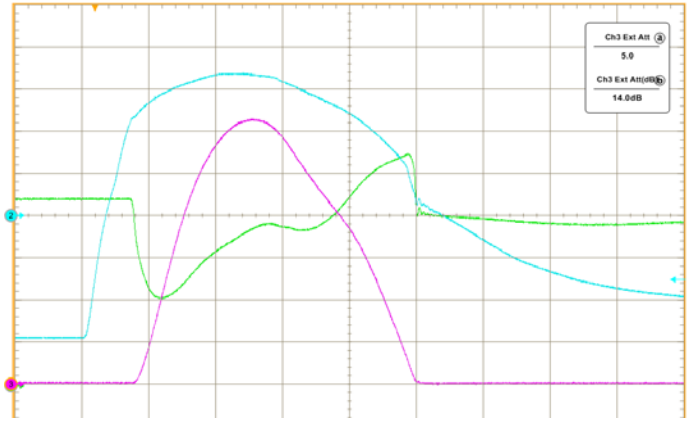

Blue:VGE 5V/div Green:VCE 500V/div Red:IC 2000A/div
Time:2us/div

HVIGBT Adapter Unit VLA587-01R

New product

Outline (Image photo)

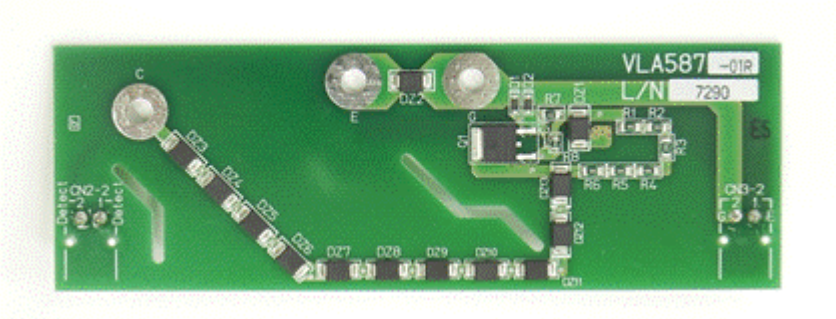

Size : 44 x 130 mm

Block Diagram

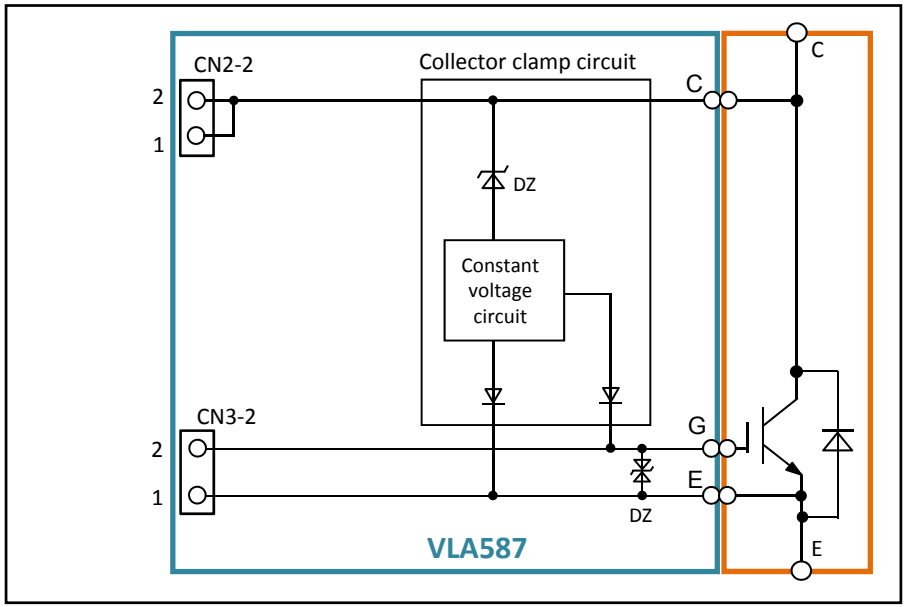

Features

>Directly mountable on the HVIGBT module
>Built in collector clamp circuit
>Built in the constant voltage circuit for gate protection
>Wire connection to gate driver unit
>Mounted connector on back substrate
>Exclusive to combination use with Isahaya gate driver

Targeted IGBT Modules

VCES : 3300V,1000A~ 1500A class IGBT module

Applications

HVDC infrastructure
Medium voltage inverter
Wind turbine inverter etc..

Connection example

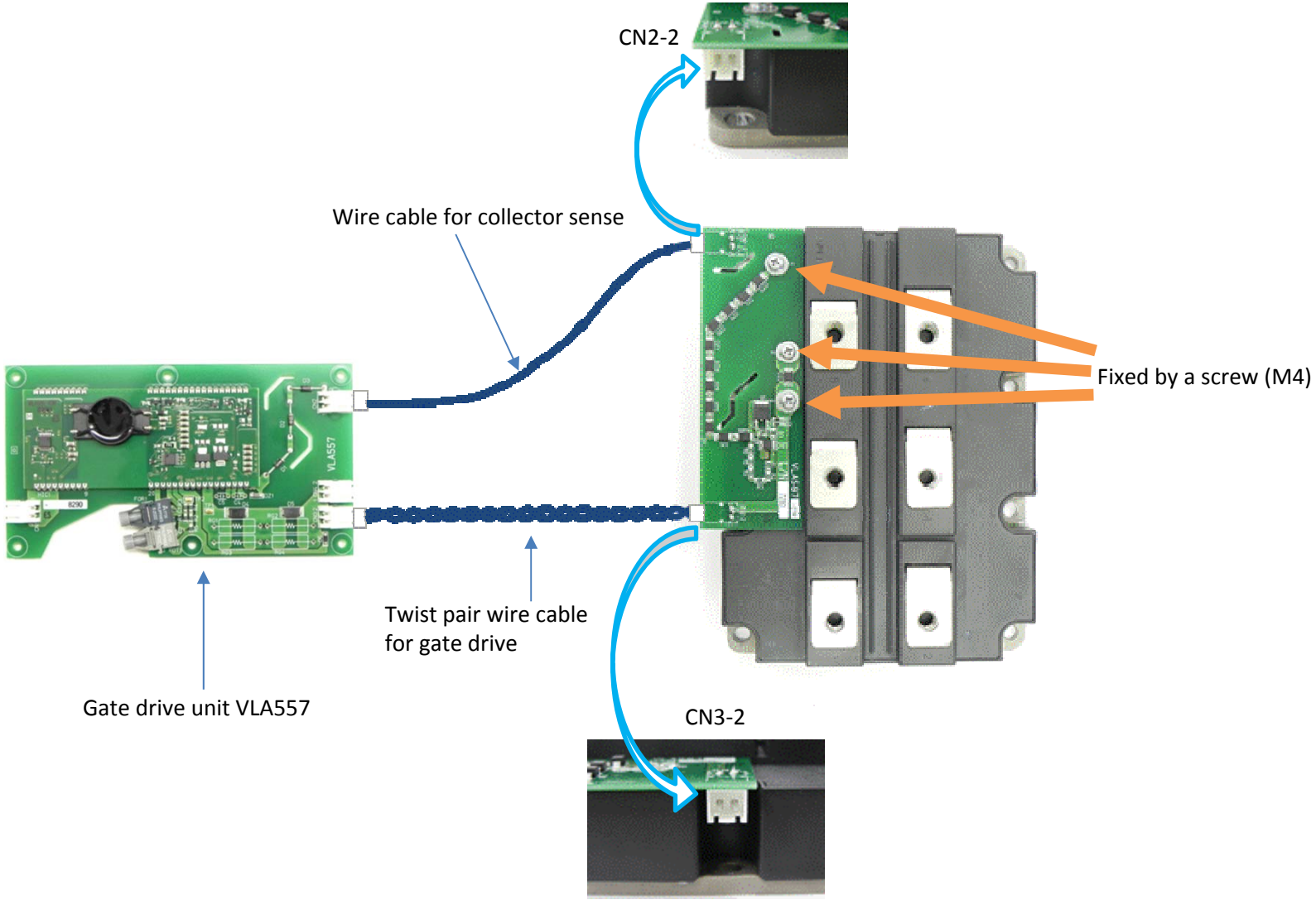

Wave form example (Normal switching)

IGBT : CM1500HC-66R
Driver : VLA557-01R
Adapter: VLA587-01R
Rg_on=1.6Ω Rg_off=5.6Ω

VPN:2200V IC:3000A (Turn on)

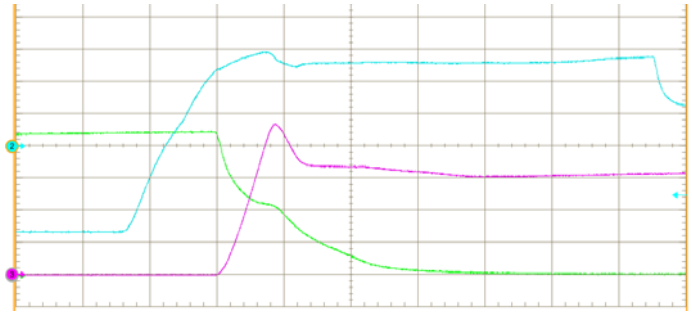

Blue:VGE 5V/div Green:VCE 500V/div Red:IC 1000A/div
Time:1us/div

Collector clump circuit works

VPN:2200V IC:3000A (Turn off)

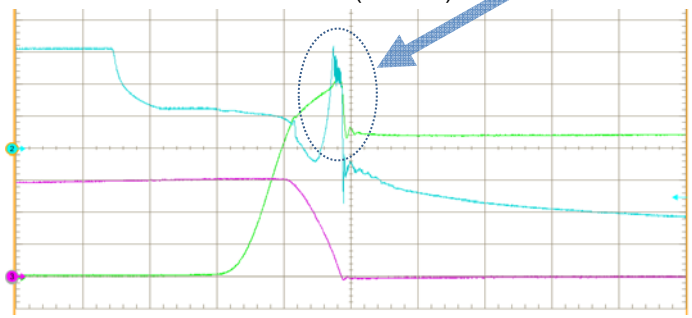

Blue:VGE 5V/div Green:VCE 500V/div Red:IC 1000A/div
Time:1us/div

HVIGBT Gate Drive Unit VLA557-03R

Preliminary

Outline (Image photo)

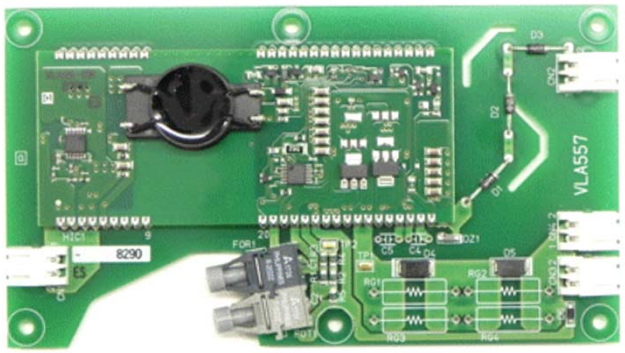

Size : 83 x 150 mm

Block Diagram

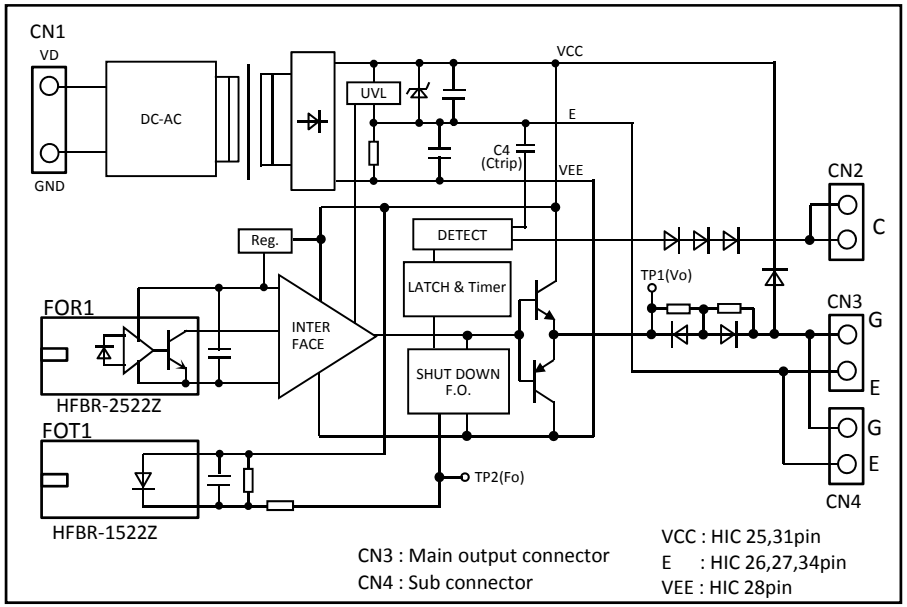

Feature

>Single channel simple and easy gate drive system
>Wire connection to IGBT
>Built in the isolated DC-DC converter for gate drive
>Output peak current is +/-24A(max)
>Built in short circuit protection with 2steps soft shut down
>Electrical isolation voltage is 6000Vrms (for 1 minute)
>Fiber optic interface

Targeted IGBT Modules

VCES : 3300V,450A ~ 600A class (LV100 series)

Applications

HVDC infrastructure
Medium voltage inverter
Wind turbine inverter etc..

HVIGBT Adapter Unit VLA595-01R

New product

Outline (Image photo)

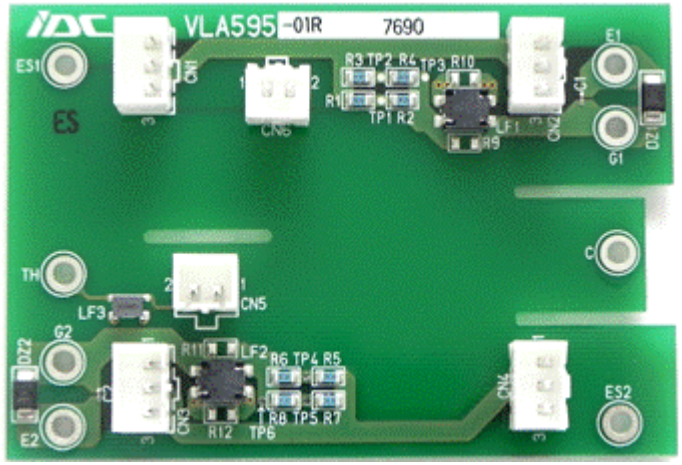

Size : 68 x 99 mm

Features

>Directly mountable on the 2in1 IGBT module
>Easy and flexible to use for parallel connection
>Wire connection to gate driver unit
>Built-in gate balance resistors of 2.2Ω
>Built-in connector for thermistor

Targeted IGBT Modules

VCES : 3300V,450A~ 600A class 2in1 IGBT module

Applications

HVDC infrastructure
Medium voltage inverter
Wind turbine inverter etc..

CM450DA-66X
3300V, 450A class
Pkg. : LV100

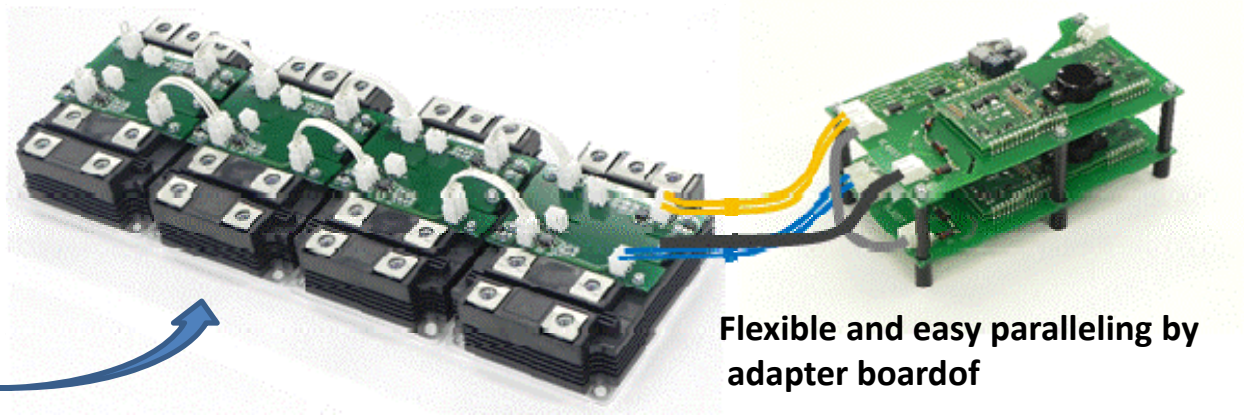

Flexible and easy paralleling by adapter boardof

Connection example 1

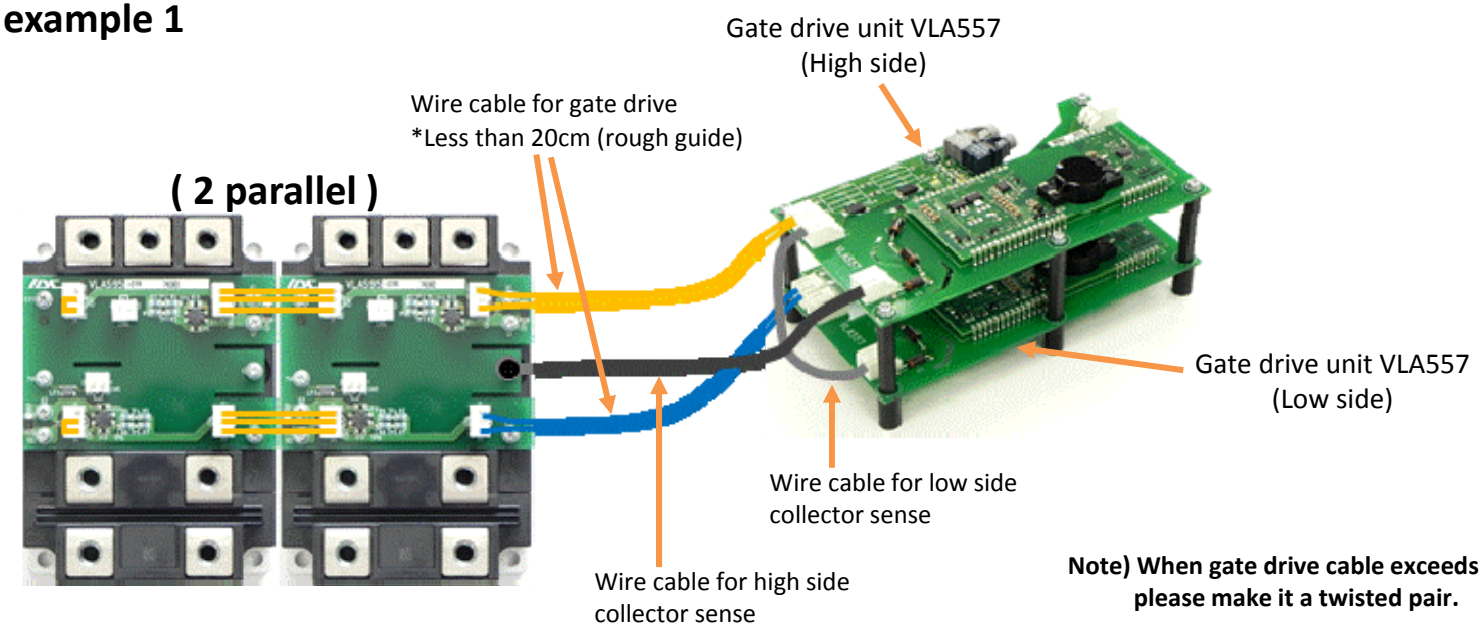

Note) When gate drive cable exceeds 20cm, please make it a twisted pair.

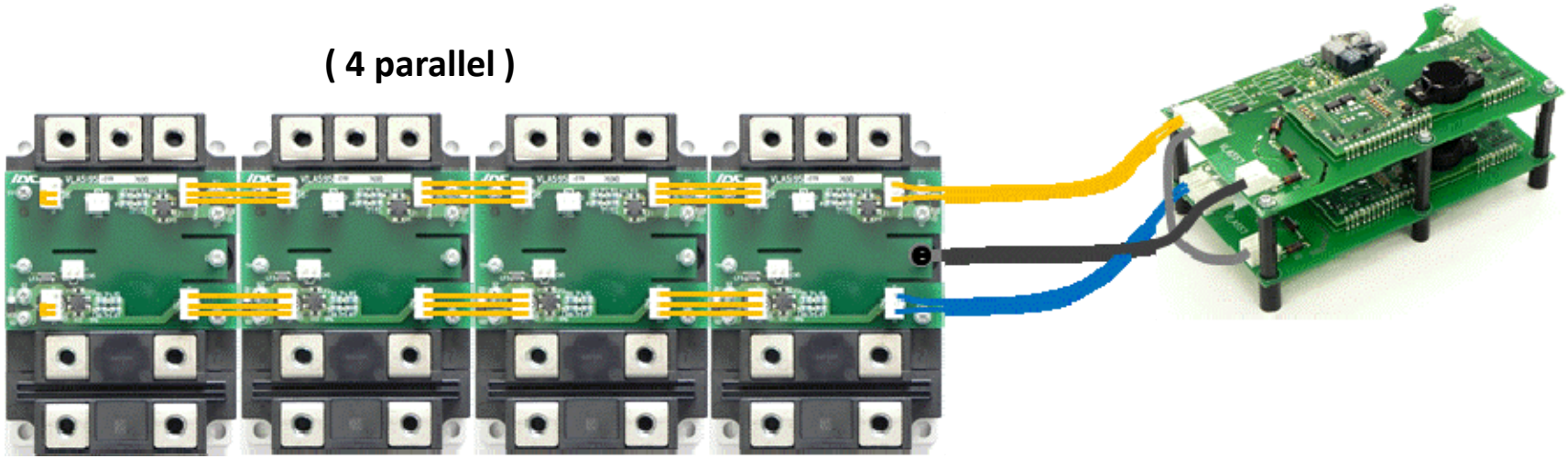

Connection example 2

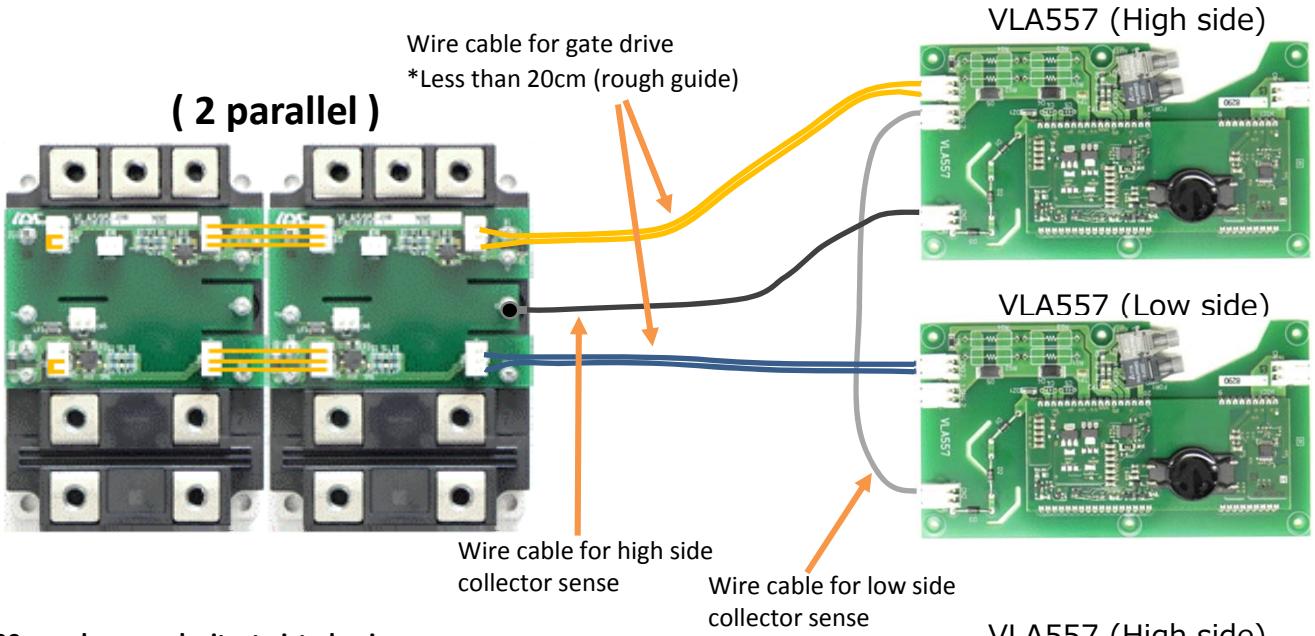

Note) When gate drive cable exceeds 20cm, please make it a twisted pair.

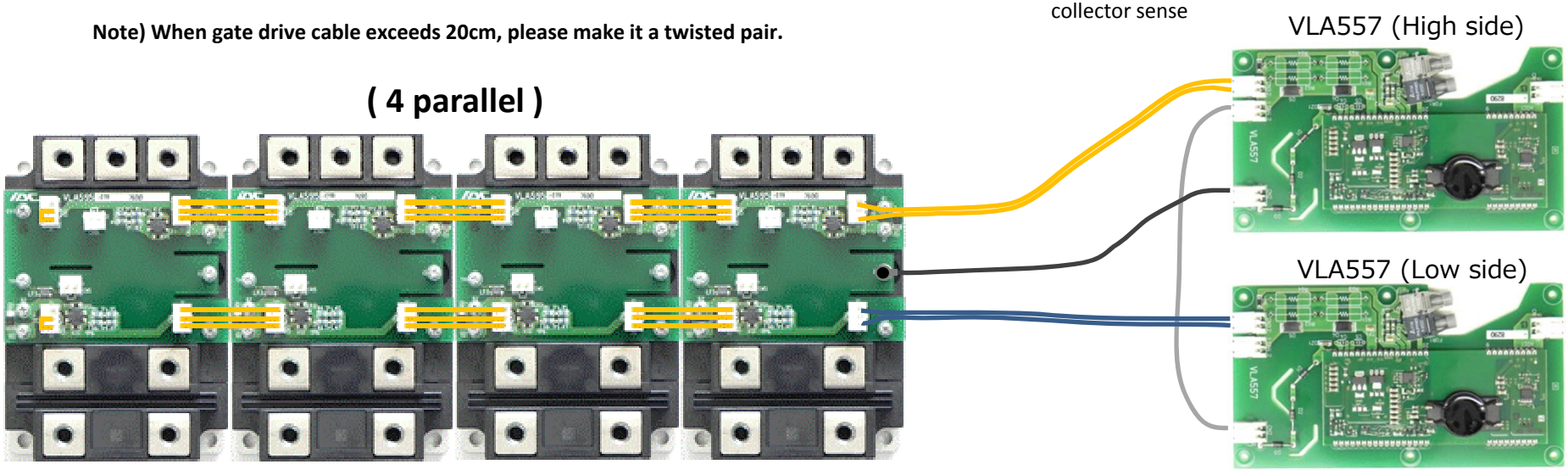

Wave form example (Normal switching)

IGBT : CM450DA-66X (2 parallel)
Driver : VLA557-03R Adapter : VLA595-01R
Rg_on=3.1Ω Rg_off=51Ω

V PN=1800V, IC=450A (Turn on)

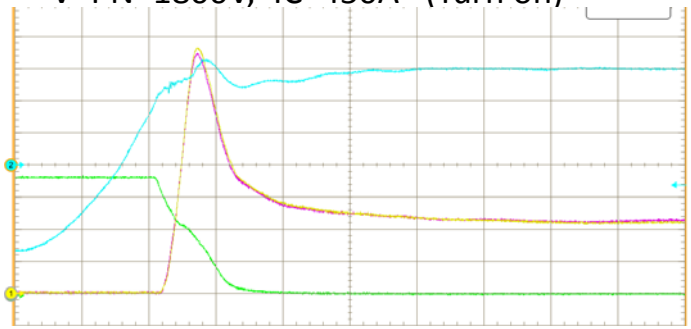

Blue:VGE_B 5V/div Green:VCE_B 500V/div Red:IC_B 200A/div
Yellow:IC_A 200A/div Time:500ns/div

V_PN=1800V, IC=600A (Turn off)

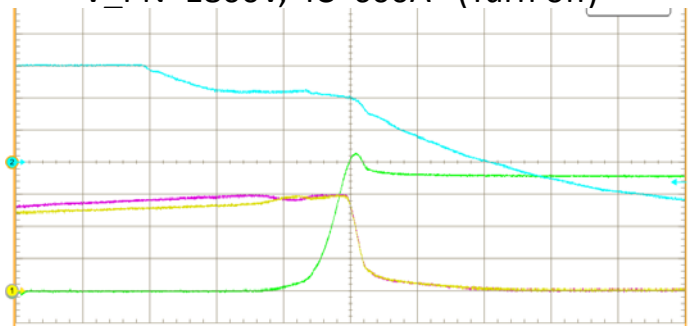

Blue:VGE_B 5V/div Green:VCE_B 500V/div Red:IC_B 200A/div
Yellow:IC_A 200A/div Time:1us/div

V_PN=1800V, IC=900A (Turn on)

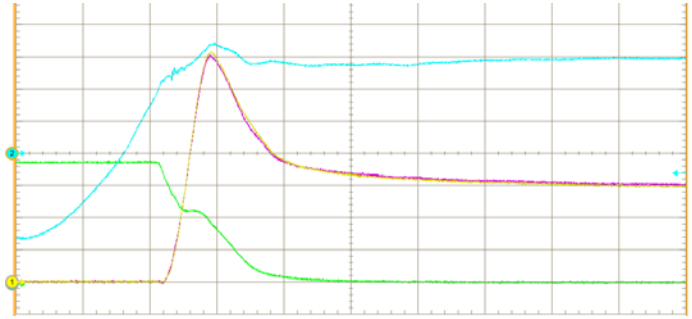

Blue:VGE_B 5V/div Green:VCE_B 500V/div Red:IC_B 300A/div
Yellow:IC_A 300A/div Time:500ns/div

V_PN=1800V, IC=1000A (Turn off)

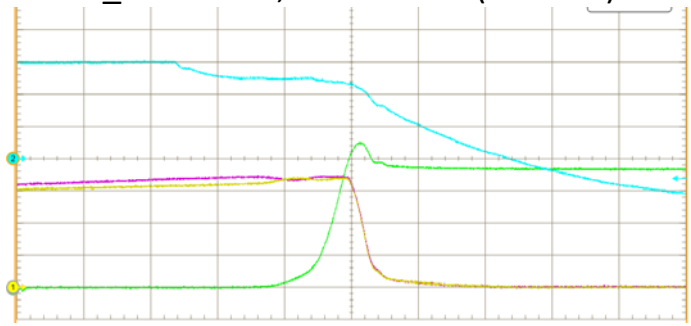

Blue:VGE_B 5V/div Green:VCE_B 500V/div Red:IC_B 300A/div
Yellow:IC_A 300A/div Time:1us/div

Wave form example (Arm short circuit)

IGBT : CM450DA-66X (2 parallel)
Driver : VLA557-03R Adapter : VLA595-01R
Rg_on=3.1Ω Rg_off=51Ω

2 steps soft gate turn off wave form

VPN:0V

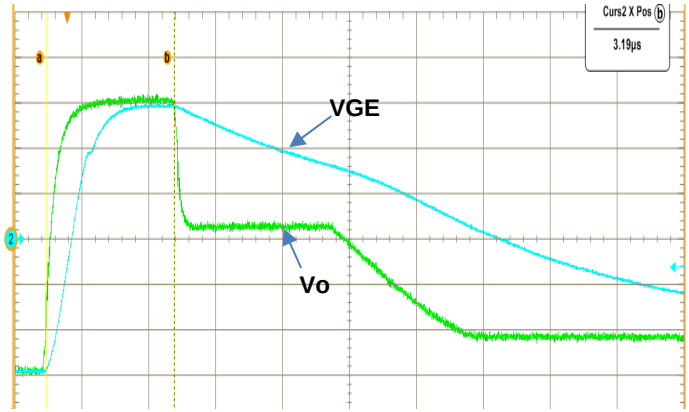

Blue:VGE 5V/div Green:Vo 5V/div Time:2us/div

VPN:1000V Arm short circuit

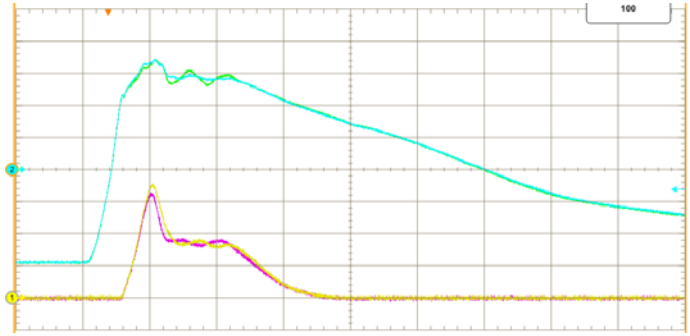

Blue:VGE_B 5V/div Green:VGE_A 5V/div
Yelllow:IC_B 1000A/div Red:IC_A 1000A/div Time:2us/div

VPN:1800V Arm short circuit

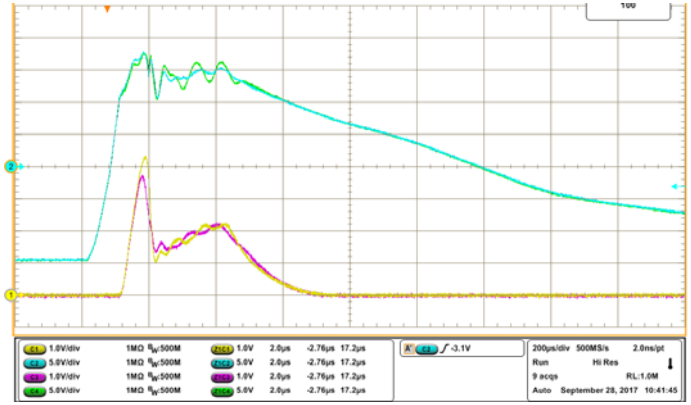

Blue:VGE_B 5V/div Green:VGE_A 5V/div
Yelllow:IC_B 1000A/div Red:IC_A 1000A/div Time:2us/div

HVIGBT Gate Drive Unit VLA557-11R

Preliminary

Outline (Image photo)

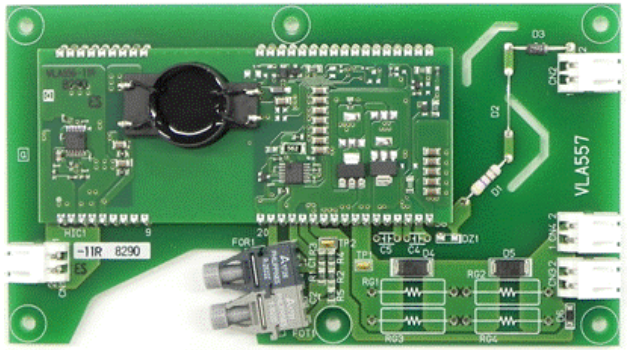

Size : 83 x 150 mm

Block Diagram

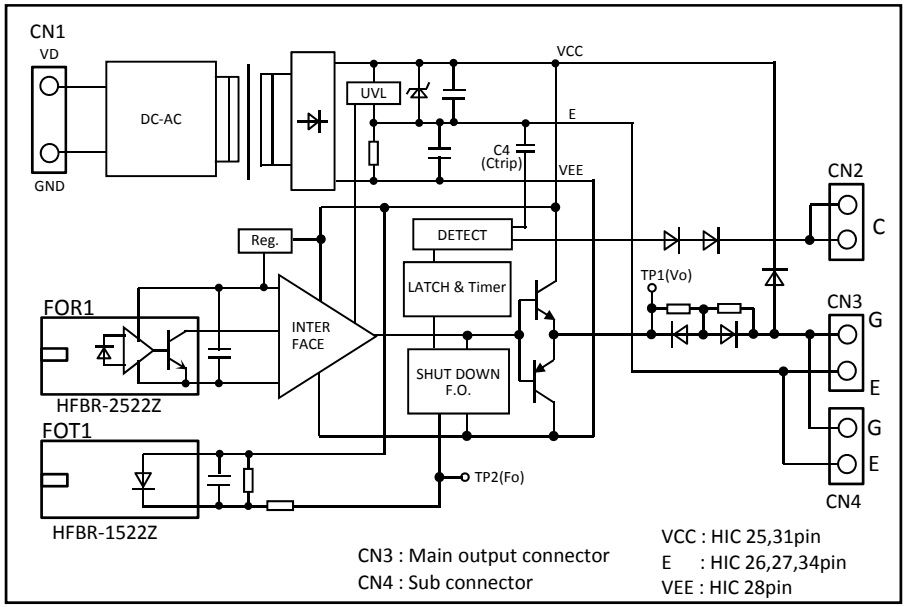

Feature

>Single channel simple and easy gate drive system
>Wire connection to IGBT
>Built in the isolated DC-DC converter for gate drive
>Output peak current is +/-24A(max)
>Built in short circuit protection with soft shut down
>Electrical isolation voltage is 4000Vrms
(for 1 minute)
>Fiber optic interface

Targeted IGBT Modules

VCES : 1700V,900A ~ 2400A class IGBT module

Applications

HVDC infrastructure
Medium voltage inverter
Wind turbine inverter etc..

HVIGBT Adapter Unit VLA588-01R

New product

Outline (Image photo)

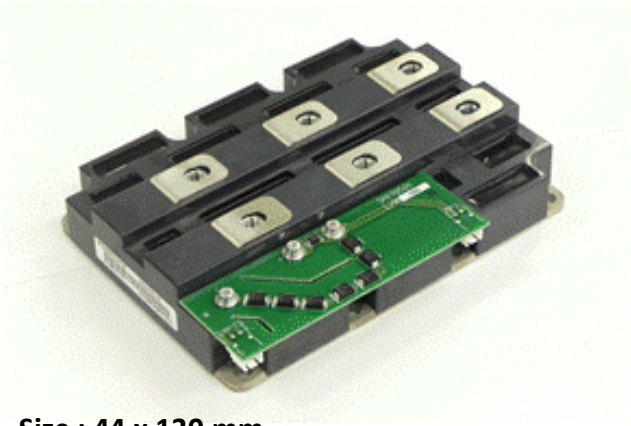

Size : 44 x 130 mm

Block Diagram

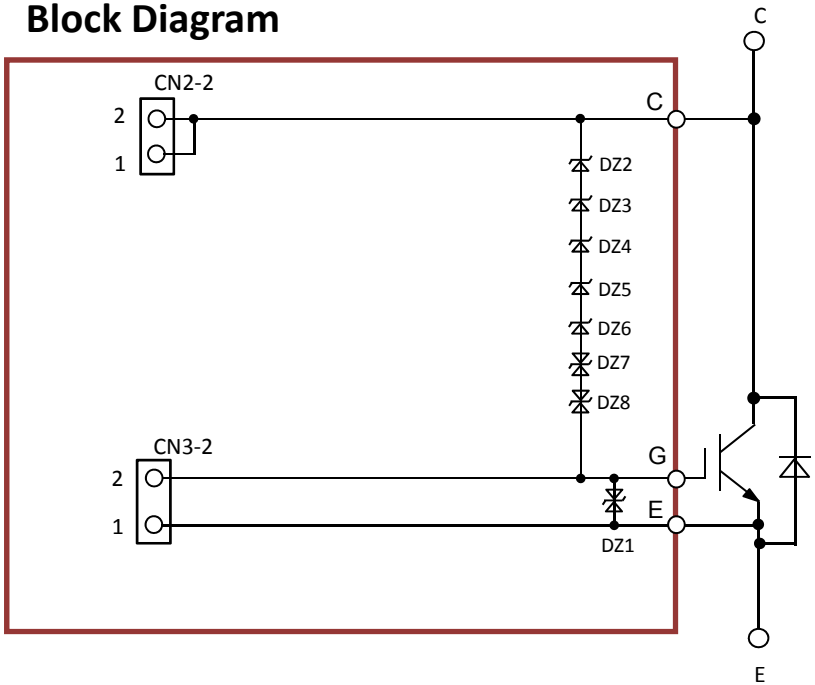

Features

>Directly mountable on the HVIGBT module
>Built in collector clamp circuit
>Wire connection to gate driver unit
>Mounted connector on back substrate
>Exclusive to combination use with Isahaya gate driver

Targeted IGBT Modules

VCES : 1700V,~ 2400A class IGBT module

Applications

HVDC infrastructure
Medium voltage inverter
Wind turbine inverter etc..

Connection example

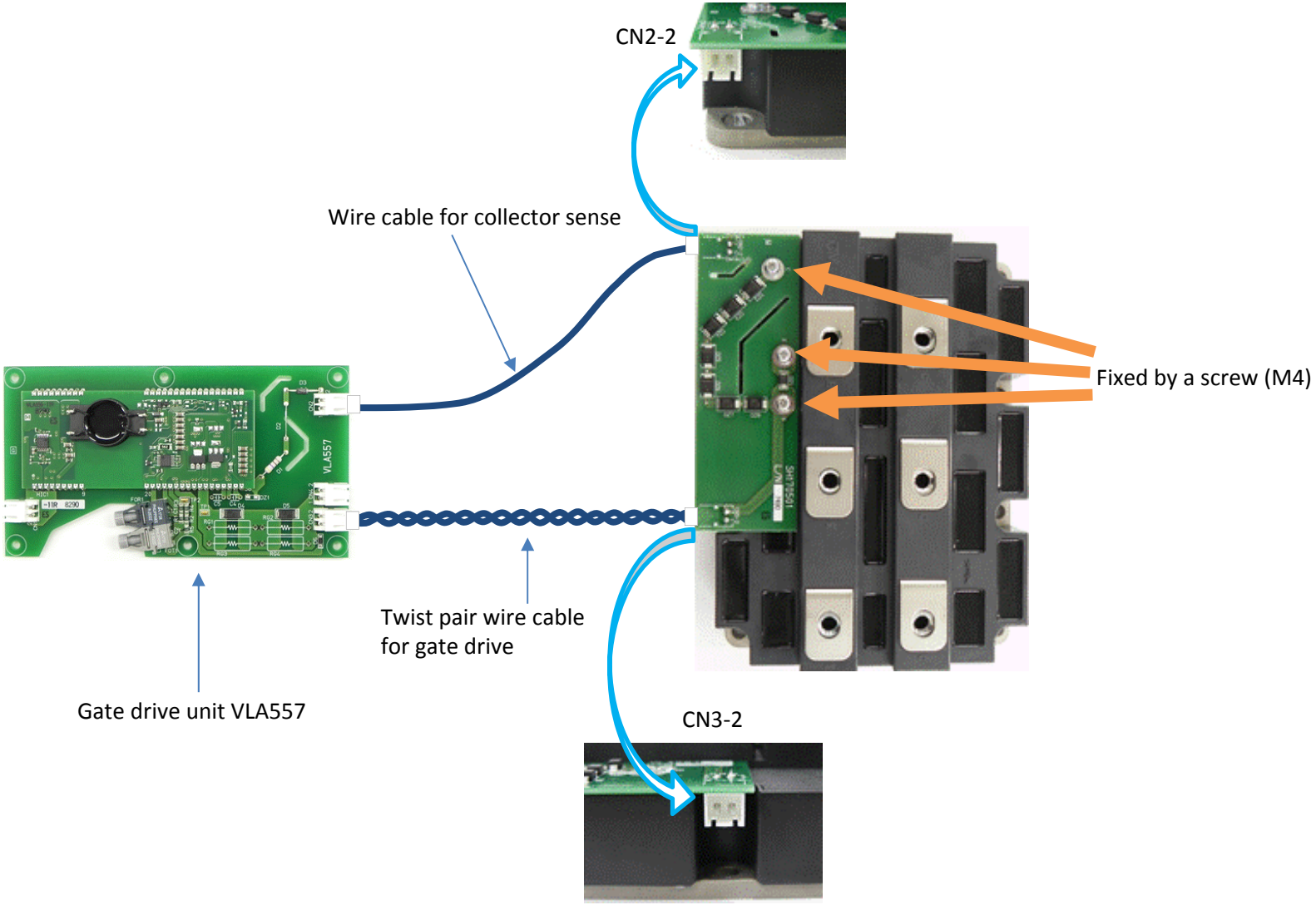

Wave form example (Normal switching)

VPN:900V IC:2400A (Turn on)

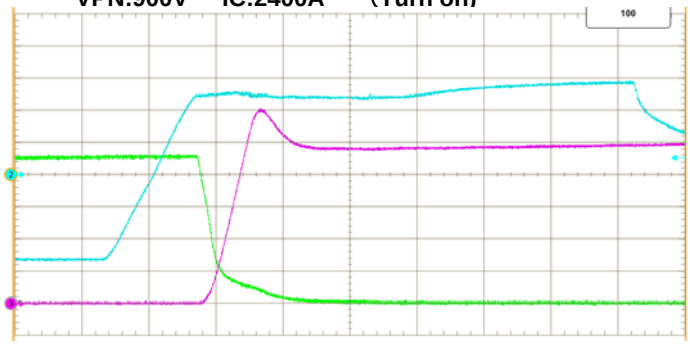

Blue:VGE 5V/div Green:VCE 200V/div Red:IC 500A/div
Time:1us/div

VPN:900V IC:2400A (Turn off)

Collector clump circuit works

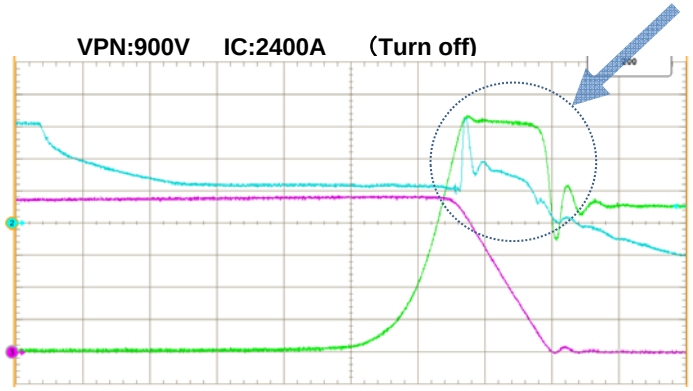

Blue:VGE 5V/div Green:VCE 200V/div Red:IC 500A/div
Time:500ns/div

VPN:900V IC:4800A (Turn on)

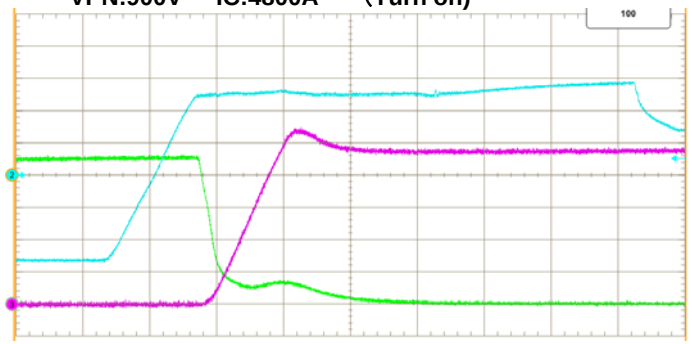

Blue:VGE 5V/div Green:VCE 500V/div Red:IC 1000A/div
Time:1us/div

VPN:900V IC:4800A (Turn off)

Collector clump circuit works

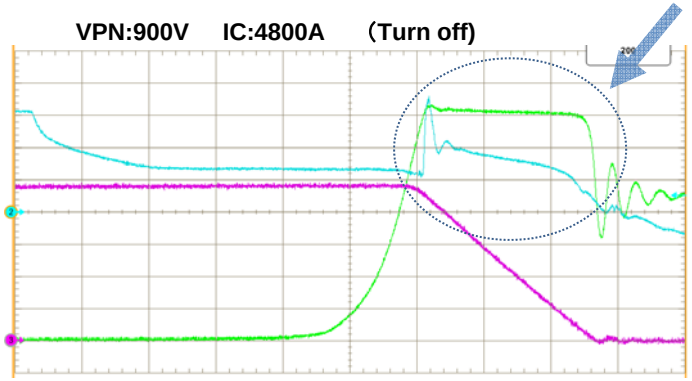

Blue:VGE 5V/div Green:VCE 200V/div Red:IC 1000A/div
Time:500ns/div

Full-SiC module Gate Drive Unit “VLB500-01R”

Planning

(Exclusive to FMF800DX-24A)

Outline (Image chart)

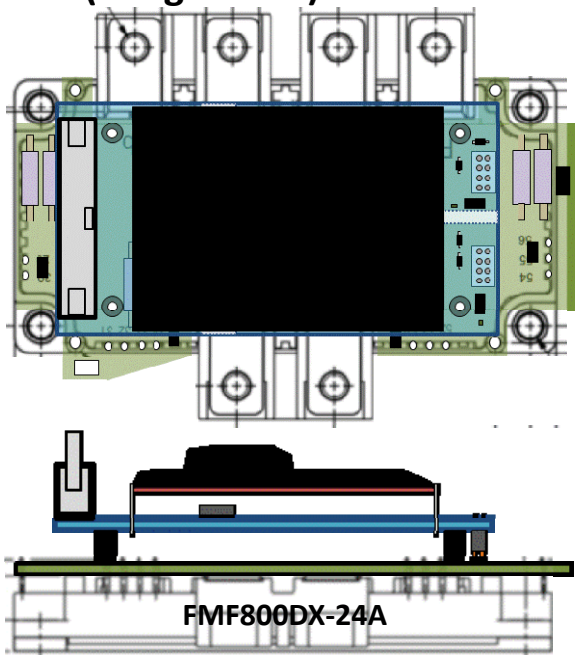

Block Diagram

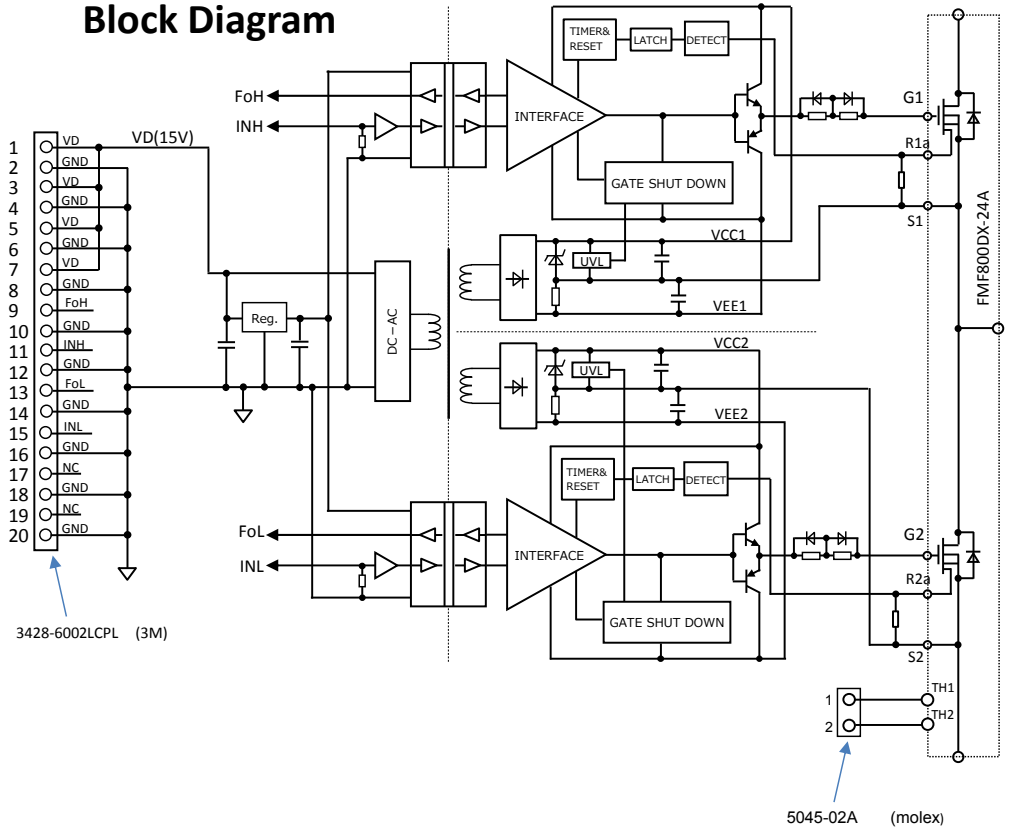

Features

>Directly mountable on the SiC module
>Built in the isolated DC-DC converter for gate drive
>Maximum switching frequency is 50kHz
>Built in short circuit protection with soft shut down
>Output peak gate current is +/-12A(max)
>Electrical isolation voltage is 2500Vrms (for 1 minute)
>CMOS compatible input interface

Applications

Inverter, Servo Amp. , Power supply etc.

Full-SiC module Gate Drive Unit “VLA586-01R”

(Exclusive to FMF800DX-24A)

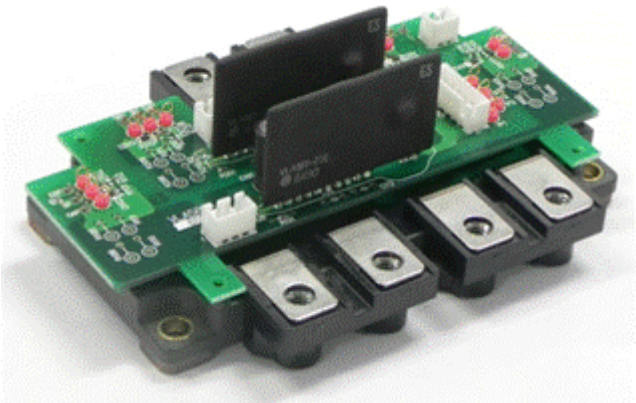

VLA586-01R + FMF800DX-24A

Block Diagram

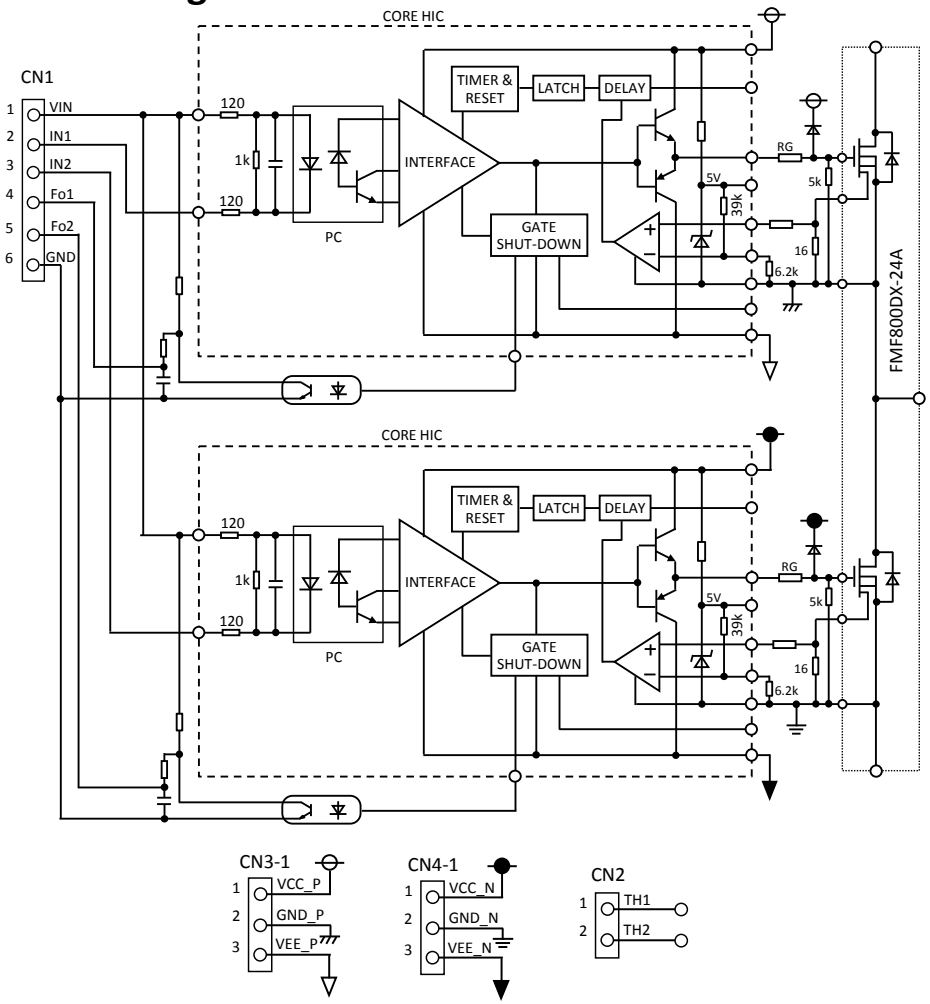

Features

>Directly mountable on the SiC module
>Built in 2 gate drive circuits
>Built in short circuit protection with soft shut down
>Output peak gate current is +/-7A(max)
>Electrical isolation voltage is 2500Vrms (for 1 minute)
>CMOS compatible input interface

Applications

Inverter, Servo Amp. , Power supply etc.

IGBT mountable Gate Drive Unit VLA592-01R

Outline (Image photo)

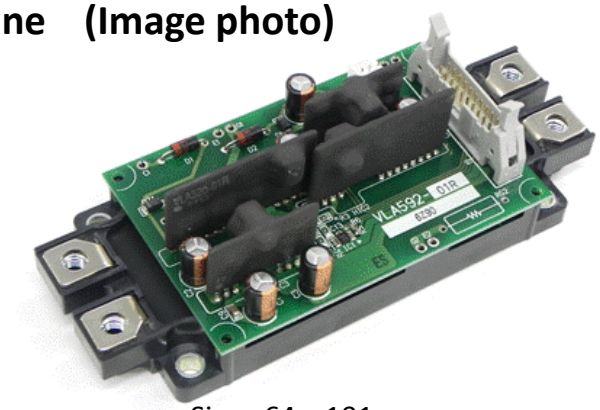

Size : 64 x 101 mm

Features

>Directly mountable on the IGBT module
>Built in the isolated DC-DC converter for gate drive
>Output gate peak current is +/-5A(max)
>Built in short circuit protection (with soft shut down)
>Electrical isolation voltage is 2500Vrms (for 1 minute)
>One way power supply system for drivers
and input signal (VD=15V)

Targeted IGBT modules

VCES = 650V series ~ 600A class
VCES = 1200V series ~ 450A class

Applications

To drive IGBT modules for inverter or AC servo system application

Block Diagram

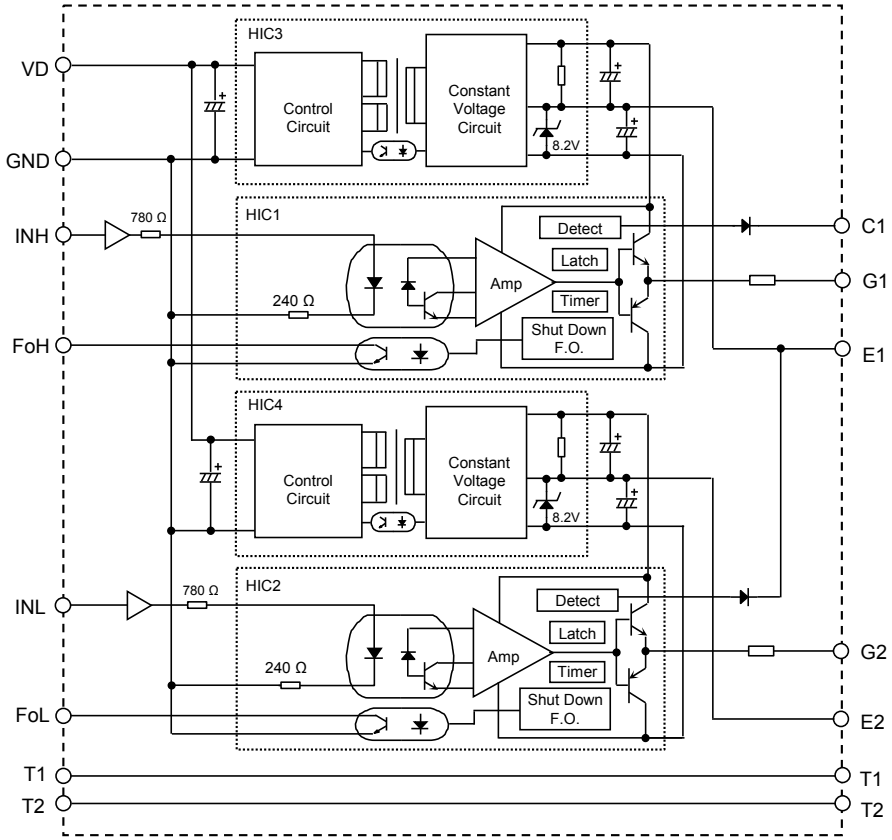

Dual Inline package gate amp module “VLA567-01R”

Outline drawing

Unit : mm

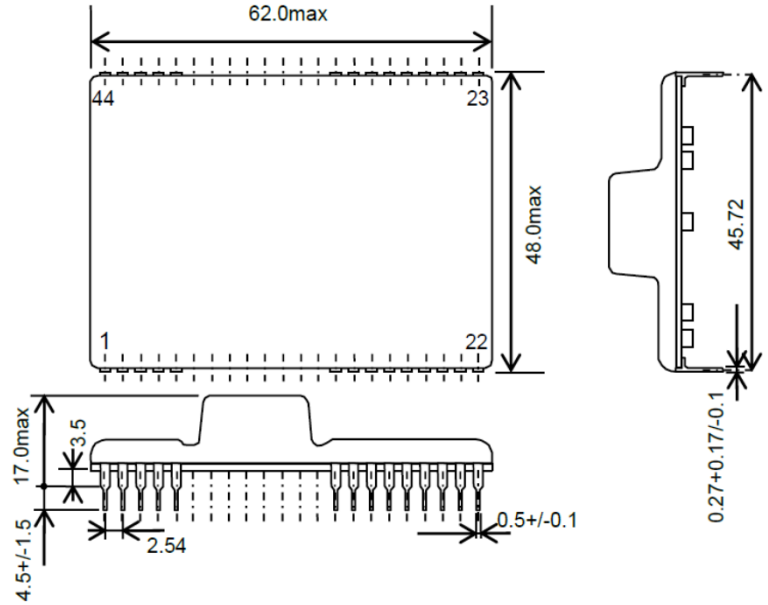

Block diagram

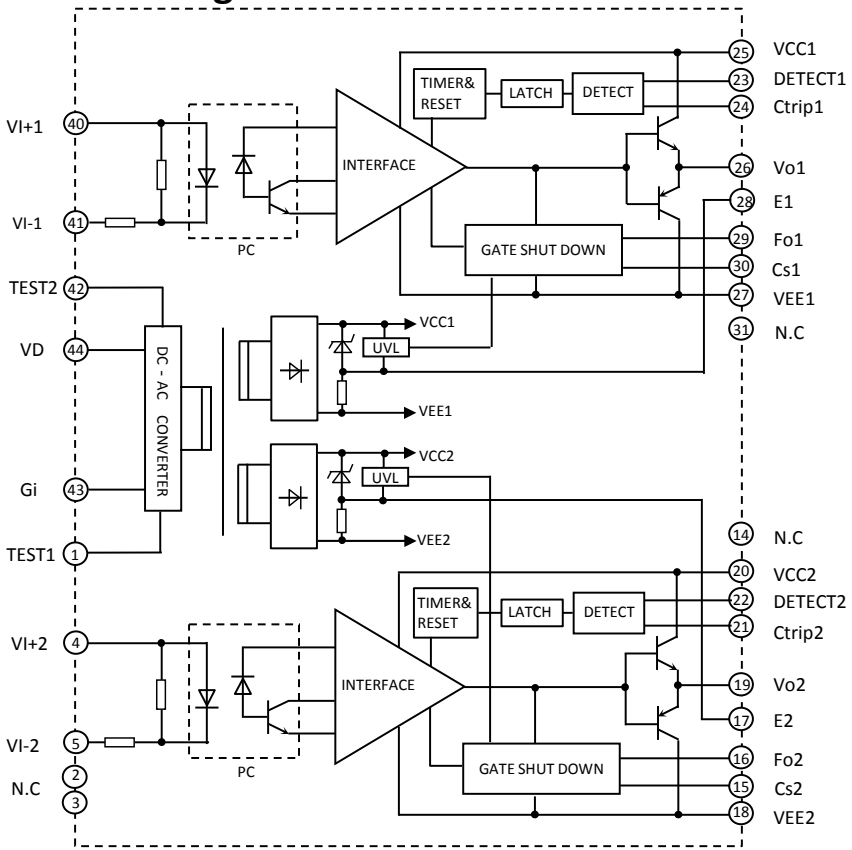

Features

>Low height, DIP structure

>Built in the isolated DC-DC converter for gate drive

>Input supply voltage is 15V

>Output peak current is +/-8A(max)

>Built in short circuit protection with soft gate shut down

>Electrical isolation voltage is 2500Vrms(for 1 min.)

>Built in gate shut down speed control circuit
(When short circuit protection work.)

Targeted IGBT modules

VCES = 600V series ~ 600A class

VCES = 1200V series ~ 450A class

Standard type IGBT driver “VLA542-01R”

Outline drawing

Unit: mm

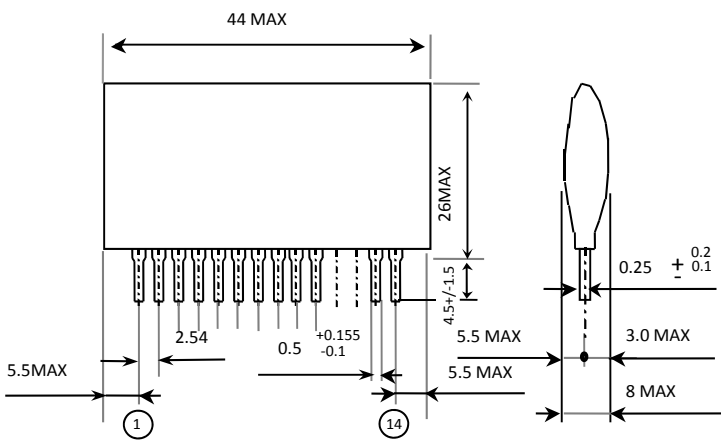

Block diagram

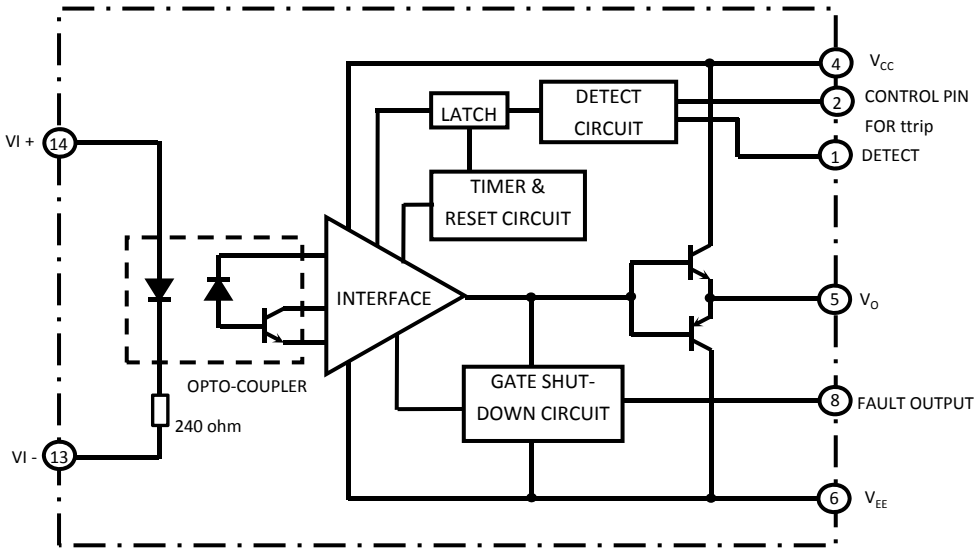

Features

- Built-in short circuit protection circuit (Soft shut down)
- Output peak current is + / -5A(max)
- SIP allows more space on mother board
- Electrical isolation voltage is 2500Vrms (for 1 minute)
- Pin compatible with M57962AL

Targeted IGBT modules

V_{CES} = 600V series up to 600A class
V_{CES} = 1200V series up to 450A class

Standard and high isolation type IGBT driver “VLA546-01R”

Outline drawing

Unit: mm

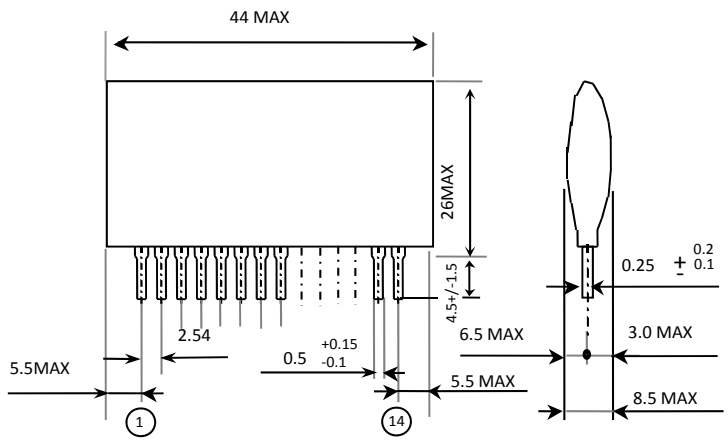

Block diagram

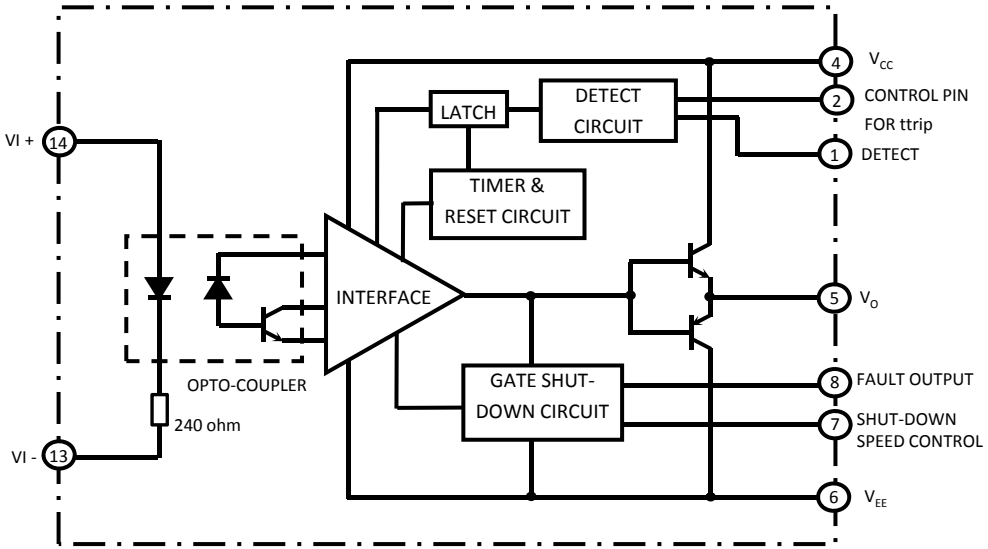

Features

- Electrical isolation voltage is 4000Vrms (for 1 minute)
- Variable fall time on activity of short circuit protection
- Built-in short circuit protection (Soft shut down)
- Output peak current is + / -5A(max)
- SIP allows more space on mother board
- Compatible with M57962CL

Targeted IGBT modules

V_{CES} = 600V series up to 600A class
V_{CES} = 1200V series up to 450A class
V_{CES} = 1700V series up to 450A class

Built-in power supply type IGBT driver “VLA500-01R”

Outline drawing

Unit: mm

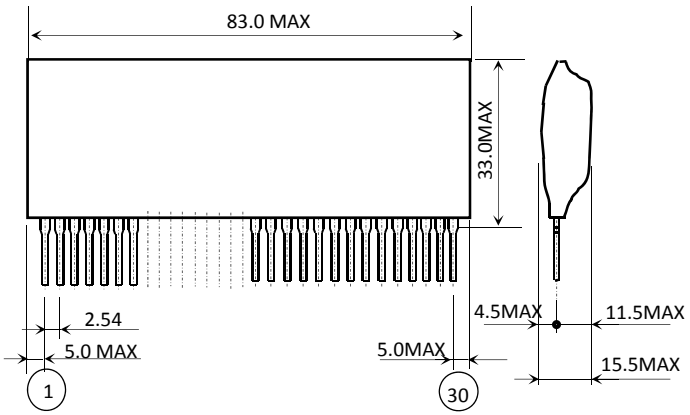

Block diagram

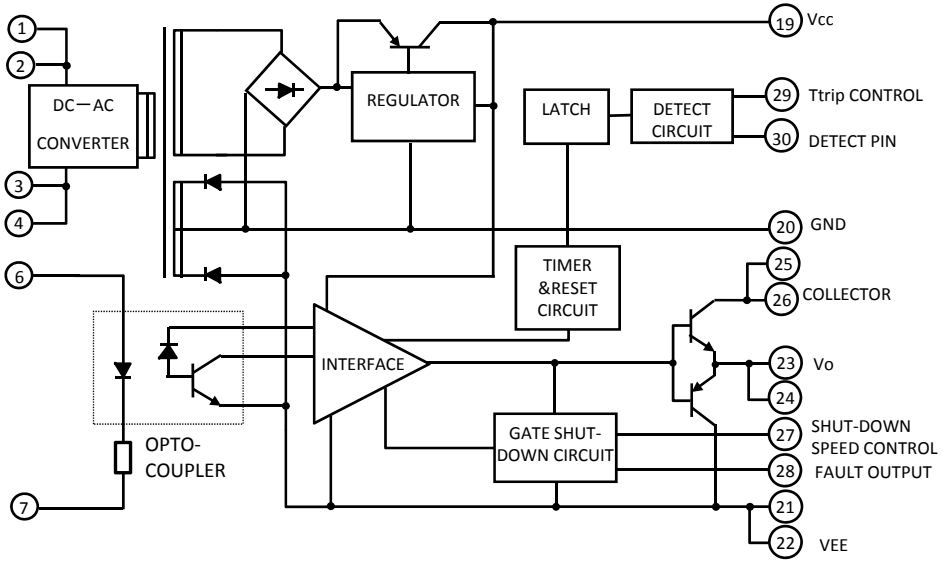

Features

>Built in the isolated DC-DC converter for gate drive

>Output peak current is + / -12A(max)

>SIP allows more space on mother board

>Built-in short circuit protection circuit

>Electrical isolation voltage is 2500Vrms (for 1 minute)

>CMOS compatible input interface

Targeted IGBT modules

VCES = 600V series up to 600A class

VCES = 1200V series up to 1400A class

High power type IGBT driver “VLA552-01R”

Outline drawing

Unit: mm

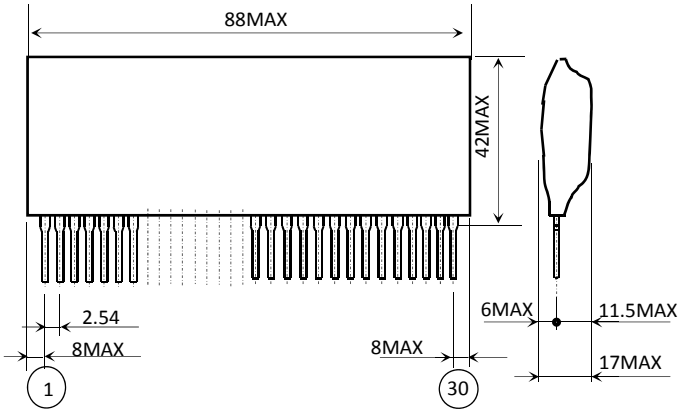

Block diagram

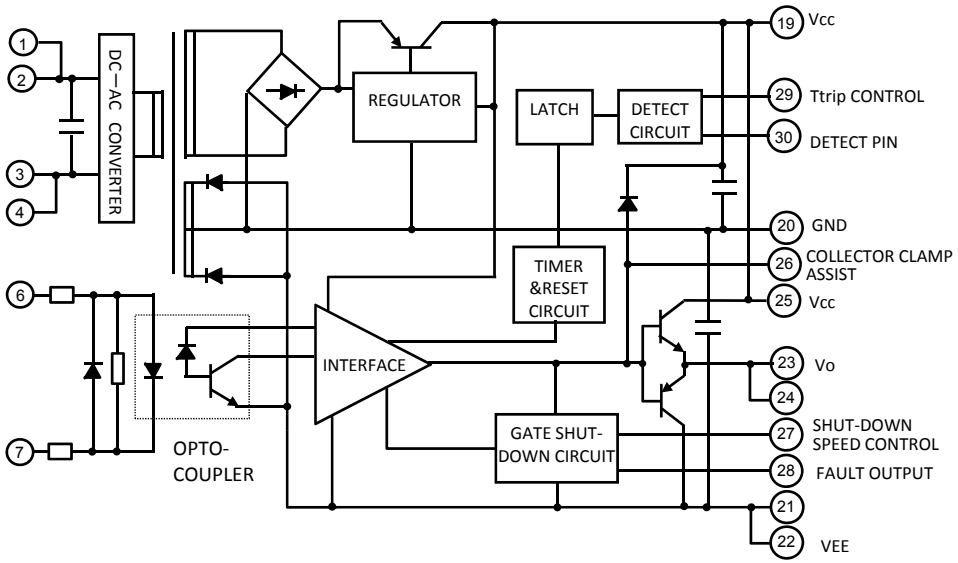

Features

>Suitable for driving New-MPD
>Built in the isolated DC-DC converter for gate drive
>Output peak current is +/-24A(max)
>SIP allows more space on mother board
>Built in short circuit protection
>Electrical isolation voltage is 4000Vrms (for 1 minute)
>CMOS compatible input interface
>Possible to assist collector clamp circuit

Targeted IGBT modules
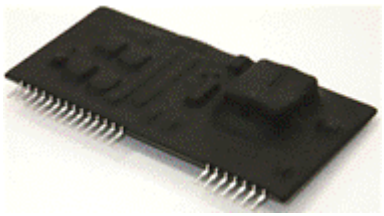
VCES = 600V series up to 600A class
VCES = 1200V series up to 2500A class
VCES = 1700V series up to 1800A class