New 2in1 IPM "V1-Series"

Conventional IPM-Series Line up

V1-Series

		25A	50A	75A	100A	150A	200A	300A	400A (450A)	600A	800A
600V	1 in 1										S
	2 in 1						S	S	S, V	S, V	
	6 in 1		L1	L1	S, V, L1	S, V, L1	S, V, L1	S, V, L1, L	L	L	
	7 in 1		S, L1	S, V, L1	S, L1	S, L1	S, L1	L1			
1200V	1 in 1								S	S	S
	2 in 1			S	S	S	S, V	S, V			
	6 in 1	L1	L1	S, V, L1	S, V, L1	V, L1	L	L	L		
	7 in 1	S, L1	S, V, L1	L1	L1	L1					

Large Package Type
Under Consideration

S Series V Series L1 Series L Series

Line-up of V1-Series (2in1)

Rating	Type Name	Package
400A/600V	PM400DV1A060	V-Series Small PKG
600A/600V	PM600DV1A060	V-Series Small PKG
800A/600V	PM800DV1B060*1)	V-Series Large PKG
200A/1200V	PM200DV1A120	V-Series Small PKG
300A/1200V	PM300DV1A120	V-Series Small PKG
450A/1200V	PM450DV1A120	V-Series Small PKG
600A/600V	PM600DV1B120*1)	V-Series Large PKG

*1) under consideration

Feature of New 2in1 IPM V1-Series

Features

- Low loss by full gate CSTBT Chip
  - 600V Type 5th-CSTBT: Vce(sat)$_{(@Tj=125^{\circ}C)}$=2.55V ---> 1.75V (*Target)
  - 1200V Type 6th-CSTBT: Vce(sat)$_{(@Tj=125^{\circ}C)}$=2.6V ---> 1.85V (*Target)
- Optimized thermal sensor on Chip
- Significantly improved power cycling capability ΔTj (wire bond fatigue) by new wire bonding technology
- Compatible with V-Series Small Package

Functions

- Short circuit protection (SC)
- Control supply under voltage protection (UV)
- Over temperature(OT) protection (on chip temperature sensor)
- Fault signal output in case of a failure (Fo)
- Regulated power supply voltage on SXR terminal for driving the external opto-coupler

V1-series

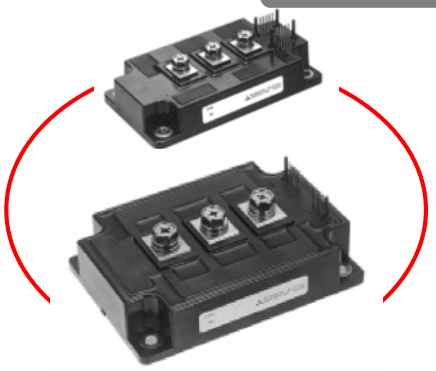

3rd-IPM(2in1) DSA-series

unify

V1-series(2in1)
Small-package

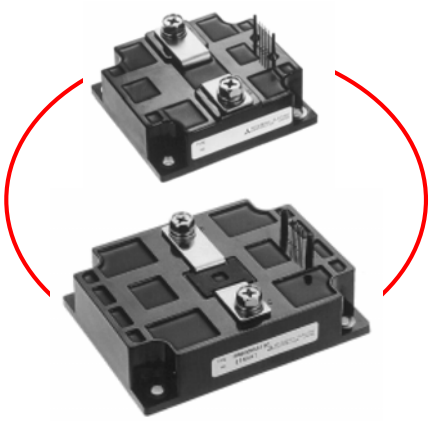

3rd-IPM(1in1) HAS-series

V1-series(2in1)
Large-package

Package Outline

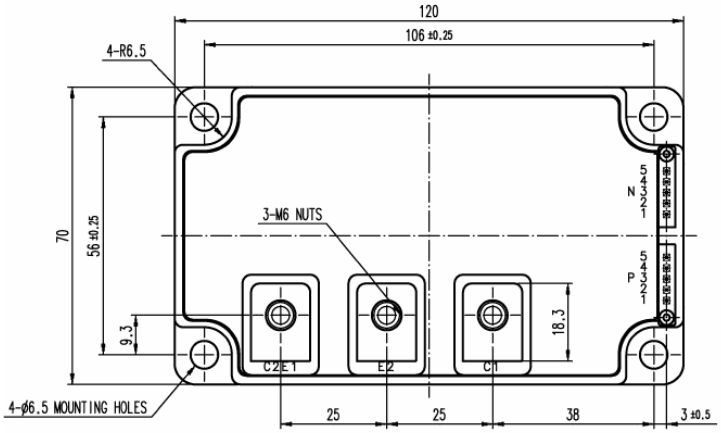

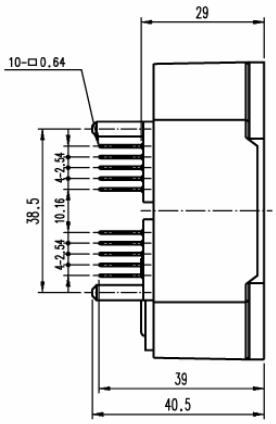

NOTE

1. TERMINAL CODE

N
5 : FNO
4 : VNC
3 : CNI
2 : SNR
1 : VN1

P
5 : FPO
4 : VPC
3 : CPI
2 : SPR
1 : VP1

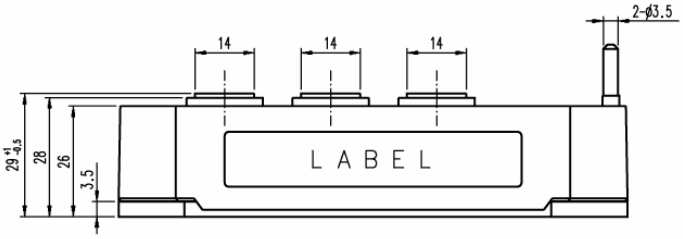

Package Outline
V1 Large-package (planned)

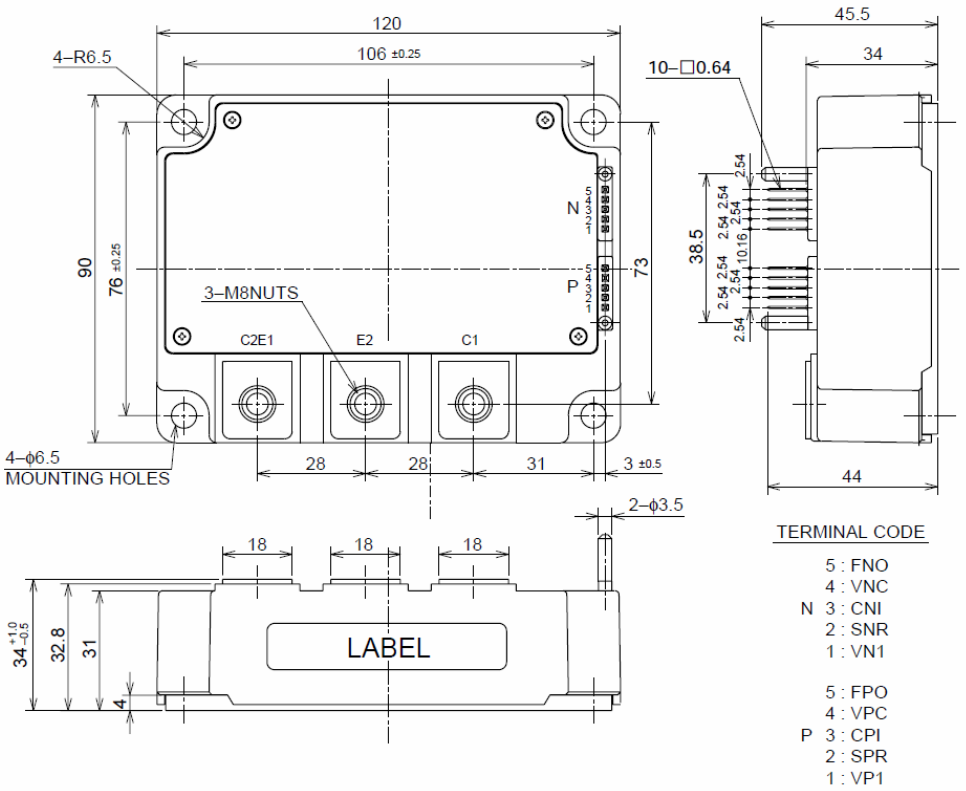

Full-Gate CSTBT™

V1 series

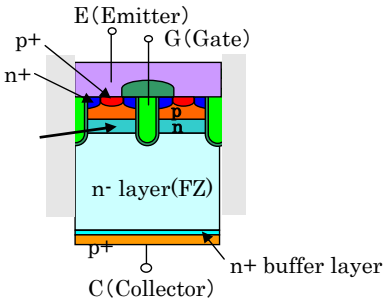

V series

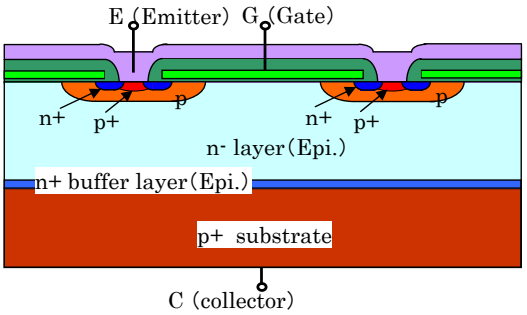

CSTBT ™ (1um), LPT
(LPT=light punch through chip)

Planar (3um), PT

	(old) V series		V1 series
600V : VCE(sat)(@Tj=125℃)=typ.	2.55V	→	typ. 1.75V
1200V : VCE(sat)(@Tj=125℃)=typ.	2.6V	→	typ. 1.85V

Internal Circuit Diagram of V1-Series

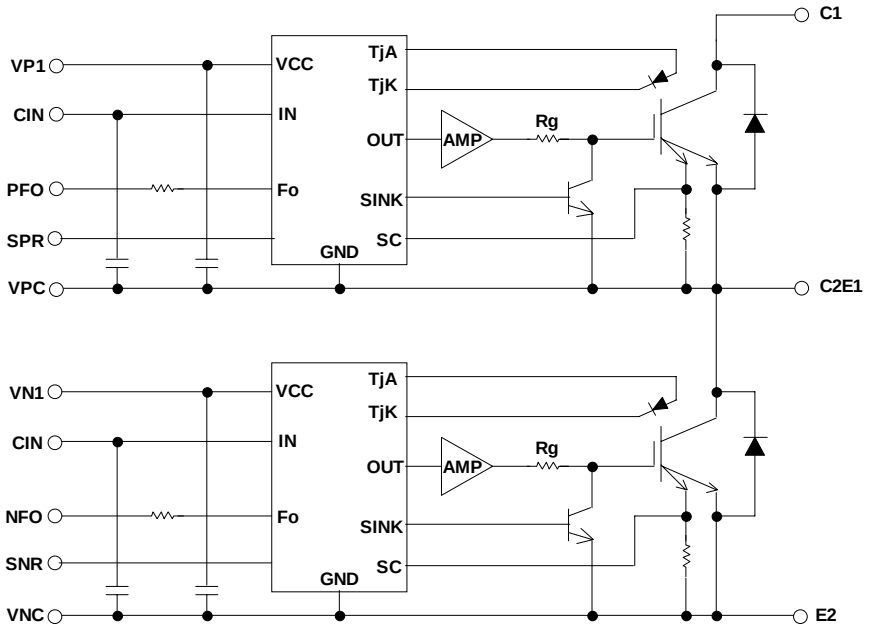

Interface Circuit of V1-Series(2in1)

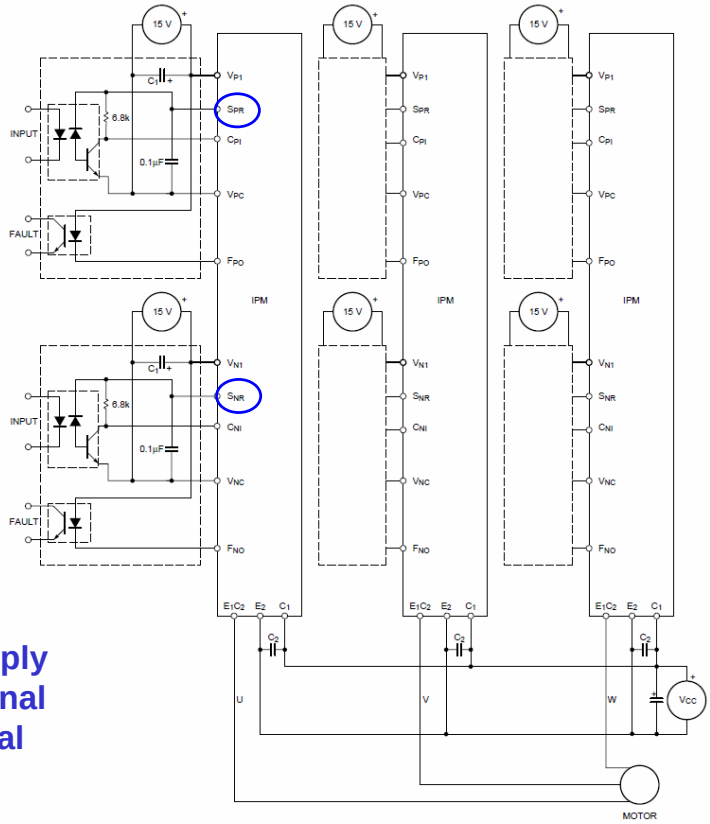

S_{PR},S_{NR}:
Regulated power supply voltage on SXR terminal for driving the external opto-coupler

Waveform of SC protection V1-Series(2in1)

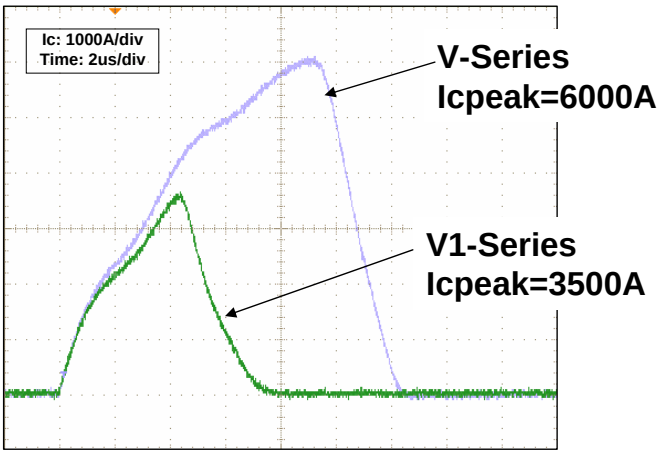

Condition:VCC=300V,VD=15V,Tj=125degC

V1-Series reduces the short-circuit currents with a negative feedback wire.

Comparison of Power Loss of V1-Series

1200V Class
200A/1200V

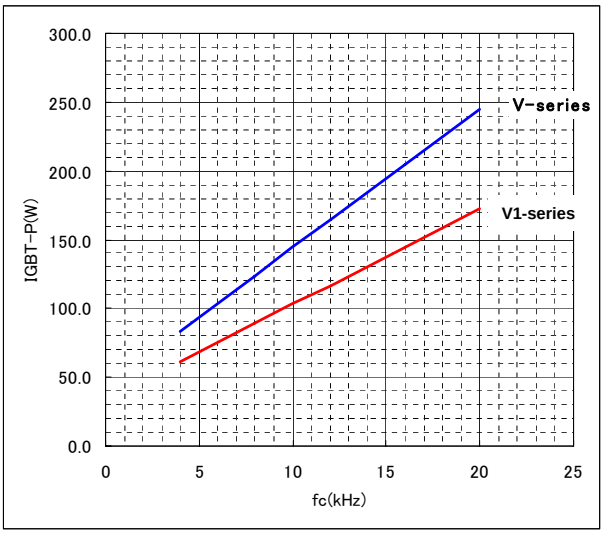

Condition:VCC=600V,VD=15V,IC=71Arms
Modulation Ratio=1, P.F=0.8

300A/1200V

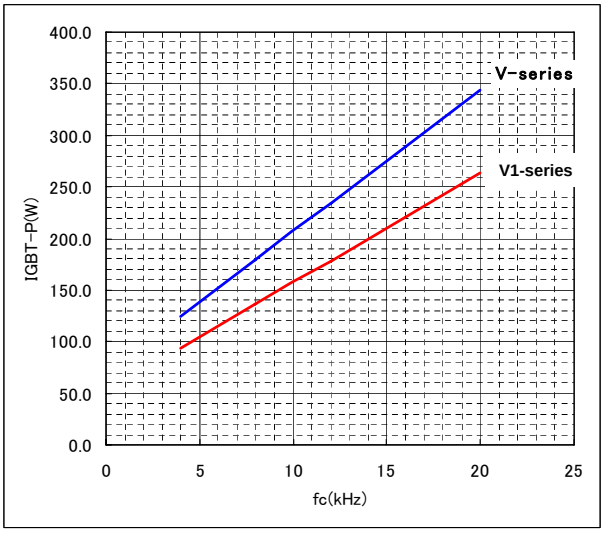

Condition:VCC=600V,VD=15V,IC=110Arms
Modulation Ratio=1, P.F=0.8

Comparison of Power Loss of V1-Series

600V Class
400A/600V

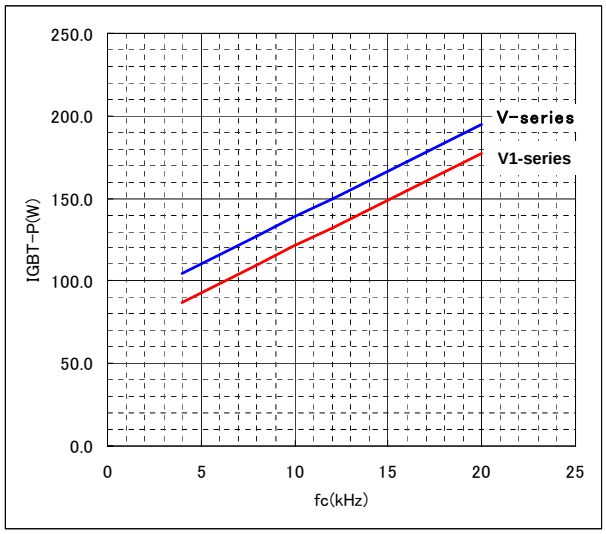

Condition:VCC=300V,VD=15V,IC=145Arms
Modulation Ratio=1, P.F=0.8

600A/600V

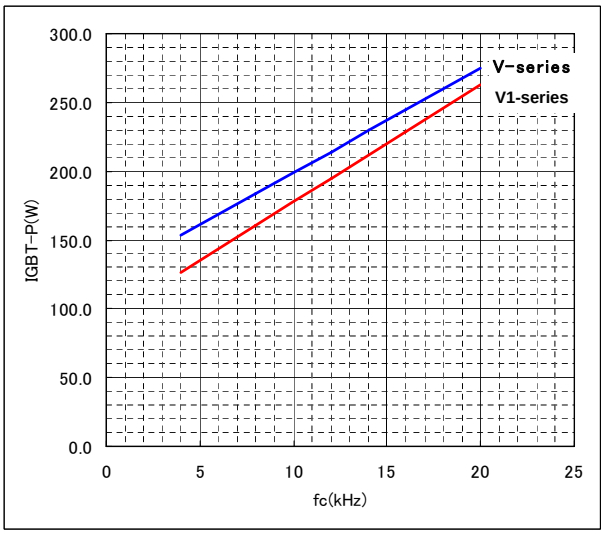

Condition:VCC=300V,VD=15V,IC=215Arms
Modulation Ratio=1, P.F=0.8

Comparison of Power Loss of Large L-Series

For an optimized thermal management, V1 series offers only 2-in-1 types.
The heat spread area of 3xV1 series modules is larger than that of the integrated 6-in-1 L-series module
Each arm has only a low heat interference to the other phases. For better cooling the modules may be mounted with more space or on separate heatsinks.

20%larger

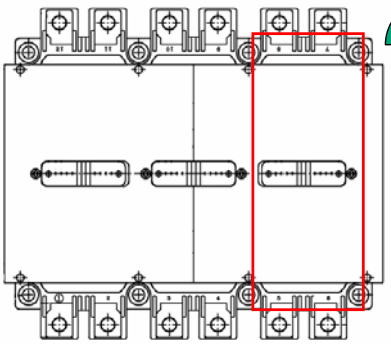

Large-L-Series
(i.e. PM300CLA120)

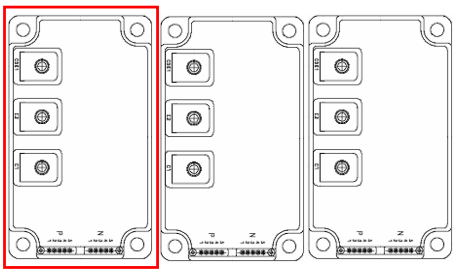

New-V1-Series
(PM***DV1A***)

Comparison of Power Loss (600A/600V)

PM600CLA060 vs. 3 x PM600DV1A060

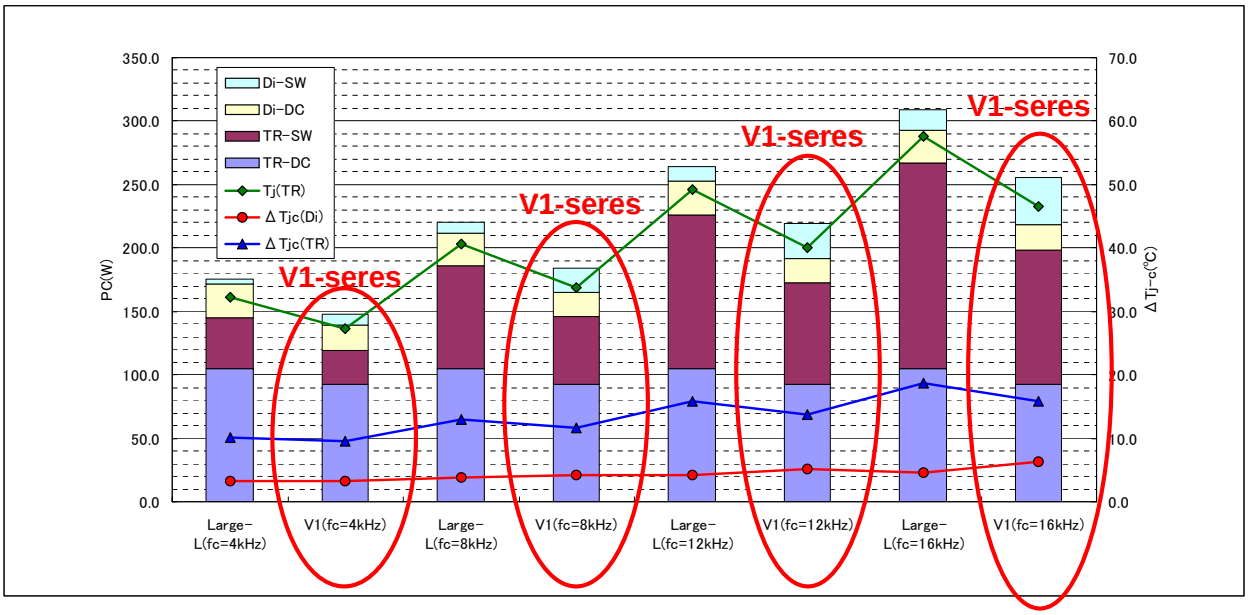

Calculation base: VCC=300V, P.F=0.8, modulation ratio=1, Io=215A[rms]

Comparison of Power Loss (300A/1200V)

PM300CLA120 vs. 3 x PM300DV1A120

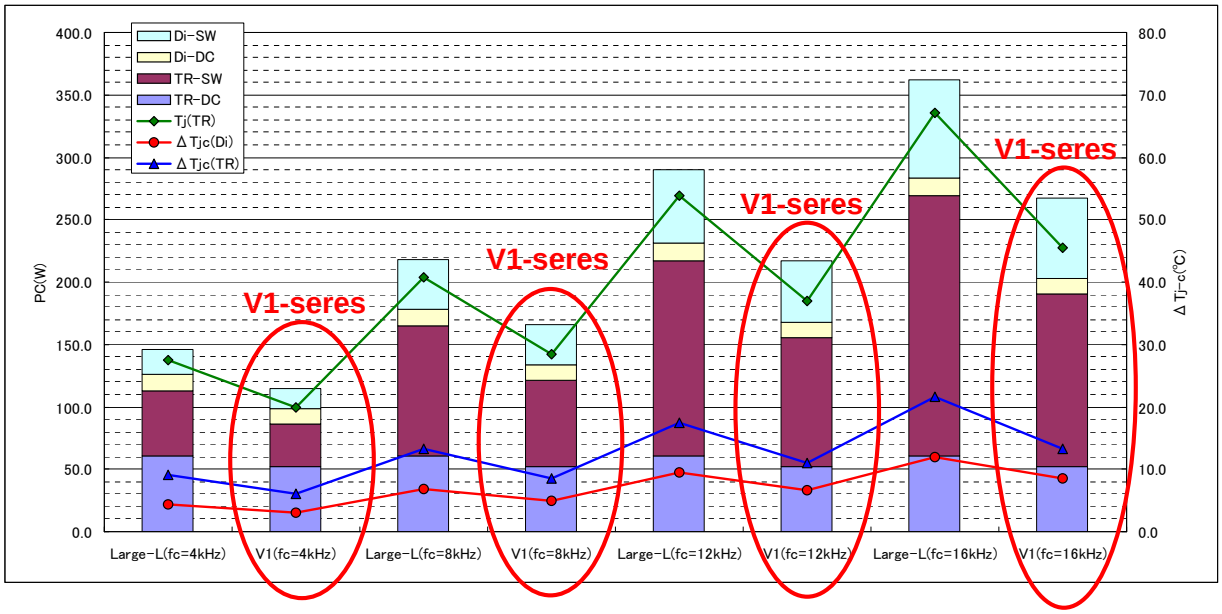

Calculation base: VCC=600V, power factor=0.8, modulation ratio=1, Io=110A[rms]

Power Cycle curve of V1-Series(2in1)

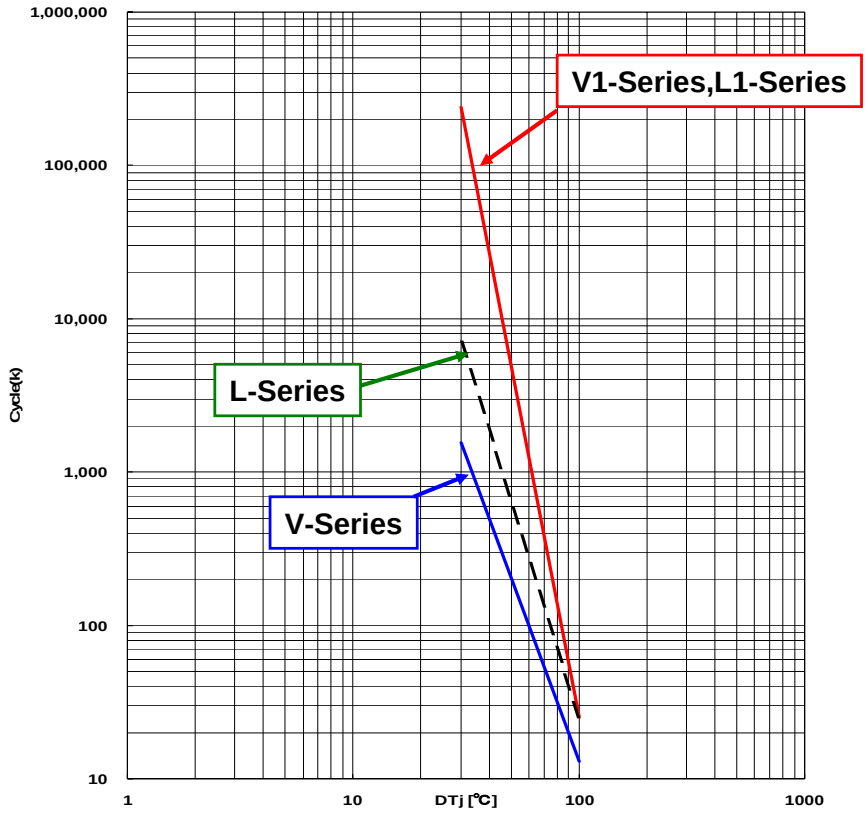
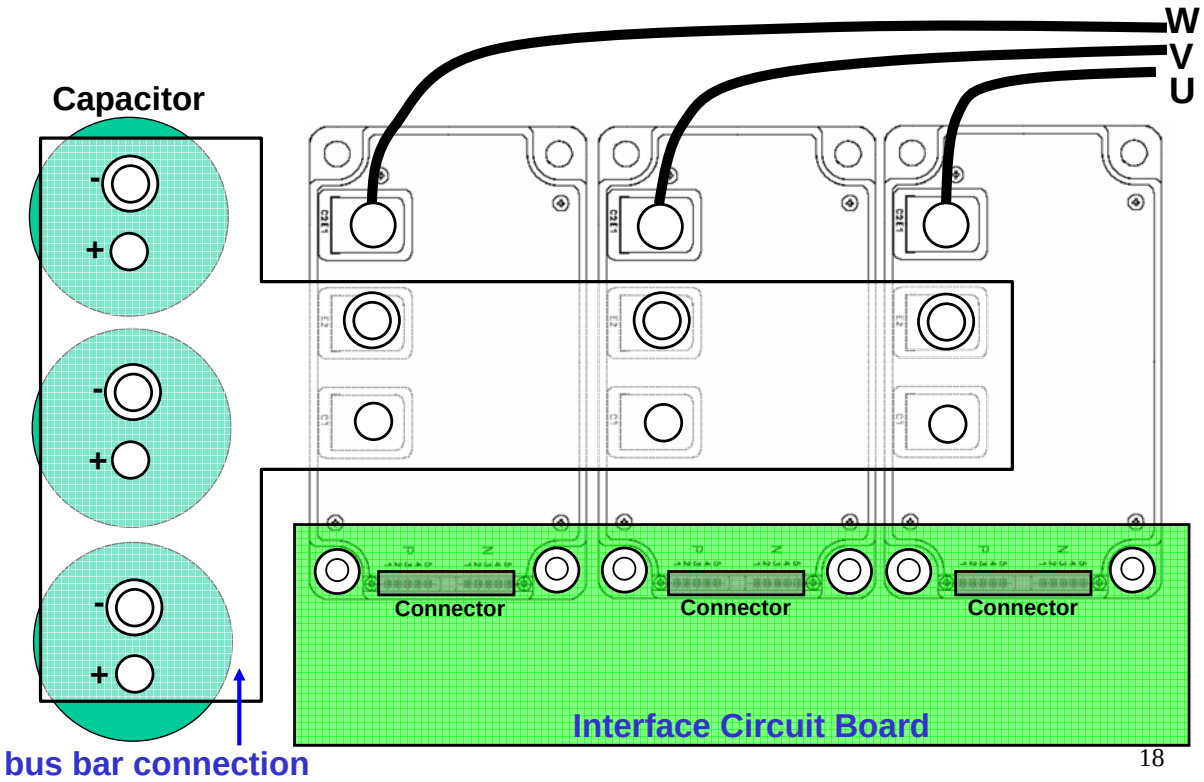
Example of mounting of V1-Series(2in1)